SECTION GI
GENERAL INFORMATION

CONTENTS

PRECAUTIONS 3
Description 3
Precautions for Supplemental Restraint System (SRS) “AIR BAG” and “SEAT BELT PRE-TENSIONER” 3
Precautions for NVIS/IVIS (NISSAN/INFINITI VEHICLE IMMOBILIZER SYSTEM - NATS) (If Equipped) 3
General Precautions 4
Precautions for Three Way Catalyst 5
Precautions for Fuel (Unleaded Regular Gasoline Recommended) 5
Precautions for Multiport Fuel Injection System or Engine Control System 6
Precautions for Hoses 6
HOSE REMOVAL AND INSTALLATION 6
HOSE CLAMPING 6
Precautions for Engine Oils 7
HEALTH PROTECTION PRECAUTIONS 7
ENVIRONMENTAL PROTECTION PRECAUTIONS 7
Precautions for Air Conditioning 7
HOW TO USE THIS MANUAL 8
Description 8
Terms 8
Units 8
Contents 8
Components 9
SYMBOLS 9
How to Follow Trouble Diagnoses 10
DESCRIPTION 10
HOW TO FOLLOW TEST GROUPS IN TROUBLE DIAGNOSES 10
HARNESS WIRE COLOR AND CONNECTOR NUMBER INDICATION 11
KEY TO SYMBOLS SIGNIFYING MEASUREMENTS OR PROCEDURES 12
How to Read Wiring Diagrams 14
CONNECTOR SYMBOLS 14
SAMPLE/WIRING DIAGRAM - EXAMPL - 15
DESCRIPTION 16
Abbreviations 22
SERVICE INFORMATION FOR ELECTRICAL INCIDENT 23
How to Check Terminal 23
CONNECTOR AND TERMINAL PIN KIT 23
HOW TO PROBE CONNECTORS 23
How to Perform Efficient Diagnosis for an Electrical Incident 26
WORK FLOW 26
INCIDENT SIMULATION TESTS 26
CIRCUIT INSPECTION 29
Control Units and Electrical Parts 34
PRECAUTIONS 34
CONSULT-II CHECKING SYSTEM 36
Description 36
Function and System Application 36
Nickel Metal Hydride Battery Replacement 36
Checking Equipment 37
CONSULT-II Start Procedure 37
CONSULT-II Data Link Connector (DLC) Circuit 38
INSPECTION PROCEDURE 38
CIRCUIT DIAGRAM 39
LIFTING POINT 40
Special Service Tools 40
Garage Jack and Safety Stand 40
2-Pole Lift 41
Board- On Lift 42
TOW TRUCK TOWING 43
Tow Truck Towing 43
2WD MODELS 43
AWD MODELS 44
Vehicle Recovery (Freeing a Stuck Vehicle) 44
TIGHTENING TORQUE OF STANDARD BOLTS 45
Description 45
Tightening Torque Table (New Standard Included) 45
PREVIOUS STANDARD 45
NEW STANDARD BASED ON ISO 46
DISCRIMINATION OF BOLTS AND NUTS 47
RECOMMENDED CHEMICAL PRODUCTS AND

SEALANTS **48**
Recommended Chemical Products and Sealants... 48
IDENTIFICATION INFORMATION **49**
Model Variation 49
IDENTIFICATION NUMBER 50
IDENTIFICATION PLATE 50
ENGINE SERIAL NUMBER 51
AUTOMATIC TRANSAXLE NUMBER 51
MANUAL TRANSAXLE NUMBER 51
Dimensions 51
Wheels & Tires 51
TERMINOLOGY **52**
SAE J1930 Terminology List 52

PRECAUTIONS

PFP:00001

Description

AAS000NC

Observe the following precautions to ensure safe and proper servicing. These precautions are not described in each individual section.

Precautions for Supplemental Restraint System (SRS) “AIR BAG” and “SEAT BELT PRE-TENSIONER”

AAS000OL

The Supplemental Restraint System such as “AIR BAG” and “SEAT BELT PRE-TENSIONER”, used along with a front seat belt, helps to reduce the risk or severity of injury to the driver and front passenger for certain types of collision. Information necessary to service the system safely is included in the SRS and SB section of this Service Manual.

WARNING:

- **To avoid rendering the SRS inoperative, which could increase the risk of personal injury or death in the event of a collision which would result in air bag inflation, all maintenance must be performed by an authorized NISSAN/INFINITI dealer.**
- **Improper maintenance, including incorrect removal and installation of the SRS, can lead to personal injury caused by unintentional activation of the system. For removal of Spiral Cable and Air Bag Module, see the SRS section.**
- **Do not use electrical test equipment on any circuit related to the SRS unless instructed to in this Service Manual. SRS wiring harnesses can be identified by yellow and/or orange harnesses or harness connectors.**

Precautions for NVIS/IVIS (NISSAN/INFINITI VEHICLE IMMOBILIZER SYSTEM - NATS) (If Equipped)

AAS000NE

NVIS/IVIS (NATS) will immobilize the engine if someone tries to start it without the registered key of NVIS/IVIS (NATS).
Both of the originally supplied ignition key IDs have been NVIS/IVIS (NATS) registered.
The security indicator is located on the instrument panel. The indicator blinks when the immobilizer system is functioning.
Therefore, NVIS/IVIS (NATS) warns outsiders that the vehicle is equipped with the anti-theft system.

- When NVIS/IVIS (NATS) detects trouble, the security indicator lamp lights up while ignition switch is in "ON" position.
  This lighting up indicates that the anti-theft is not functioning, so prompt service is required.
- When servicing NVIS/IVIS (NATS) (trouble diagnoses, system initialization and additional registration of other NVIS/IVIS (NATS) ignition key IDs), CONSULT-II hardware and CONSULT-II NVIS/IVIS (NATS) software is necessary.
  Regarding the procedures of NVIS/IVIS (NATS) initialization and NVIS/IVIS (NATS) ignition key ID registration, refer to CONSULT-II operation manual, NVIS/IVIS (NATS).

Therefore, CONSULT-II NVIS/IVIS (NATS) software (program card and operation manual) must be kept strictly confidential to maintain the integrity of the anti-theft function.

- When servicing NVIS/IVIS (NATS) (trouble diagnoses, system initialization and additional registration of other NVIS/IVIS (NATS) ignition key IDs), it may be necessary to re-register original key identification. Therefore, be sure to receive all keys from vehicle owner. A maximum of four or five key IDs can be registered into NVIS/IVIS (NATS).
- When failing to start the engine first time using the key of NVIS/IVIS (NATS), start as follows.

1. Leave the ignition key in "ON" position for approximately 5 seconds.
2. Turn ignition key to "OFF" or "LOCK" position and wait approximately 5 seconds.
3. Repeat step 1 and 2 again.
4. Restart the engine while keeping the key separate from any others on key-chain.

General Precautions

AAS000NF

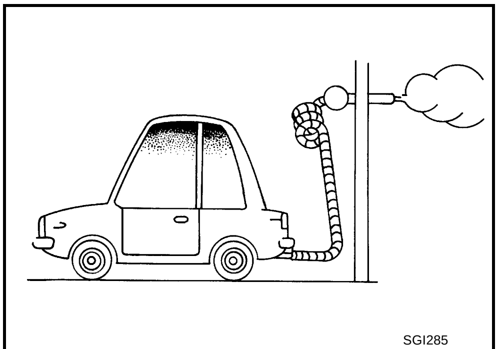
SGI285

- Do not operate the engine for an extended period of time without proper exhaust ventilation.
  Keep the work area well ventilated and free of any inflammable materials. Special care should be taken when handling any inflammable or poisonous materials, such as gasoline, refrigerant gas, etc. When working in a pit or other enclosed area, be sure to properly ventilate the area before working with hazardous materials.
  Do not smoke while working on the vehicle.

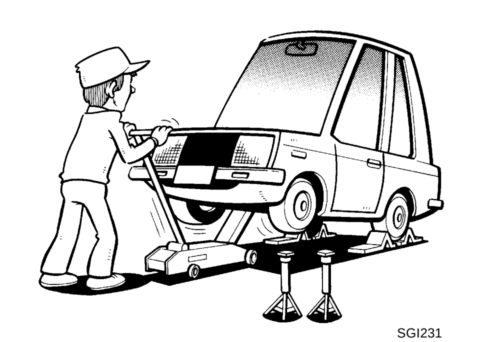
SGI231

- Before jacking up the vehicle, apply wheel chocks or other tire blocks to the wheels to prevent the vehicle from moving. After jacking up the vehicle, support the vehicle weight with safety stands at the points designated for proper lifting before working on the vehicle.
  These operations should be done on a level surface.
- When removing a heavy component such as the engine or transaxle/transmission, be careful not to lose your balance and drop them. Also, do not allow them to strike adjacent parts, especially the brake tubes and master cylinder.

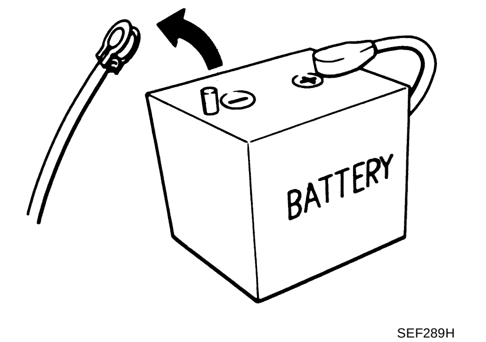

SEF289H

- Before starting repairs which do not require battery power:
  Turn off ignition switch.
  Disconnect the negative battery terminal.
- If the battery terminals are disconnected, recorded memory of radio and each control unit is erased.

SGI233

- To prevent serious burns:
  Avoid contact with hot metal parts.
  Do not remove the radiator cap when the engine is hot.
- Dispose of drained oil or the solvent used for cleaning parts in an appropriate manner.
- Do not attempt to top off the fuel tank after the fuel pump nozzle shuts off automatically.
  Continued refueling may cause fuel overflow, resulting in fuel spray and possibly a fire.
- Clean all disassembled parts in the designated liquid or solvent prior to inspection or assembly.
- Replace oil seals, gaskets, packings, O-rings, locking washers, cotter pins, self-locking nuts, etc. with new ones.
- Replace inner and outer races of tapered roller bearings and needle bearings as a set.
- Arrange the disassembled parts in accordance with their assembled locations and sequence.
- Do not touch the terminals of electrical components which use microcomputers (such as ECM).
  Static electricity may damage internal electronic components.
- After disconnecting vacuum or air hoses, attach a tag to indicate the proper connection.
- Use only the fluids and lubricants specified in this manual.

GI B C D E F G H I J K L M

- Use approved bonding agent, sealants or their equivalents when required.
- Use hand tools, power tools (disassembly only) and recommended special tools where specified for safe and efficient service repairs.
- When repairing the fuel, oil, water, vacuum or exhaust systems, check all affected lines for leaks.

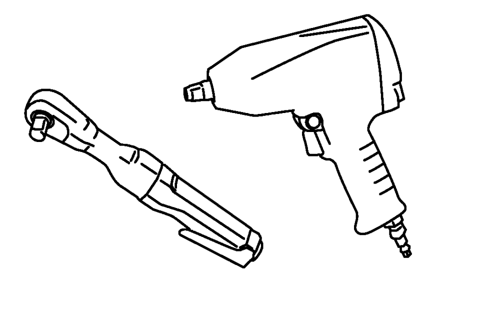

PBIC0190E

- Before servicing the vehicle:
  Protect fenders, upholstery and carpeting with appropriate covers.
  Take caution that keys, buckles or buttons do not scratch paint.

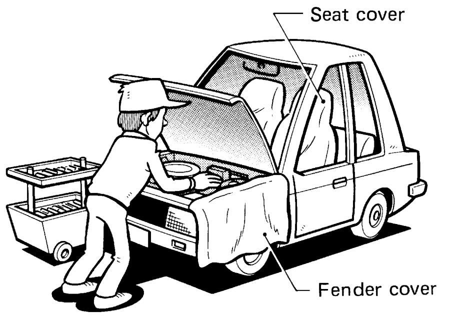

SGI234

WARNING:
To prevent ECM from storing the diagnostic trouble codes, do not carelessly disconnect the harness connectors which are related to the engine control system and TCM (transmission control module) system. The connectors should be disconnected only when working according to the WORK FLOW of TROUBLE DIAGNOSES in EC and AT sections.

Precautions for Three Way Catalyst

AAS000NG

If a large amount of unburned fuel flows into the catalyst, the catalyst temperature will be excessively high. To prevent this, follow the instructions.

- Use unleaded gasoline only. Leaded gasoline will seriously damage the three way catalyst.
- When checking for ignition spark or measuring engine compression, make tests quickly and only when necessary.
- Do not run engine when the fuel tank level is low, otherwise the engine may misfire, causing damage to the catalyst.

Do not place the vehicle on flammable material. Keep flammable material off the exhaust pipe and the three way catalyst.

Precautions for Fuel (Unleaded Regular Gasoline Recommended)

AAS000OQ

Use unleaded regular gasoline with an octane rating of at least 87 AKI (Anti-Knock Index) number (Research octane number 91).

CAUTION:
Do not use leaded gasoline. Using leaded gasoline will damage the three way catalyst. Using a fuel other than that specified could adversely affect the emission control devices and systems, and could also affect the warranty coverage validity.

Precautions for Multiport Fuel Injection System or Engine Control System AAS000NI

- Before connecting or disconnecting any harness connector for the multiport fuel injection system or ECM:
  Turn ignition switch to “OFF” position.
  Disconnect negative battery terminal.
  Otherwise, there may be damage to ECM.
- Before disconnecting pressurized fuel line from fuel pump to injectors, be sure to release fuel pressure.
- Be careful not to jar components such as ECM and mass air flow sensor.

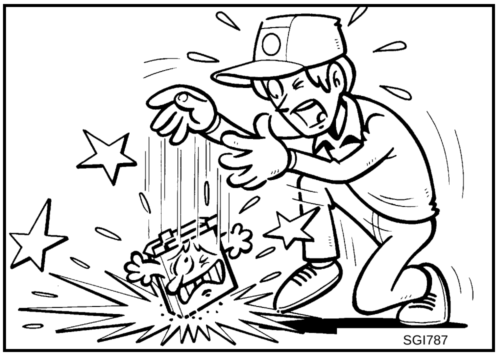

SGI787

Precautions for Hoses AAS000NJ

HOSE REMOVAL AND INSTALLATION

- To prevent damage to rubber hose, do not pry off rubber hose with tapered tool or screwdriver.

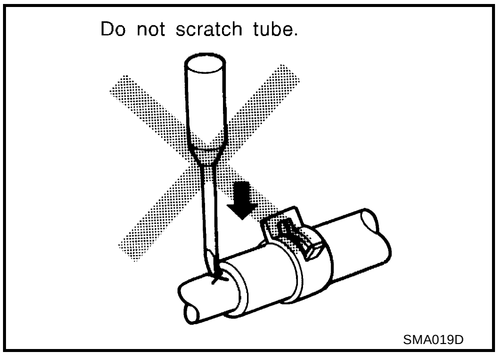

SMA019D

- To reinstall the rubber hose securely, make sure that hose insertion length and orientation is correct. (If tube is equipped with hose stopper, insert rubber hose into tube until it butts up against hose stopper.)

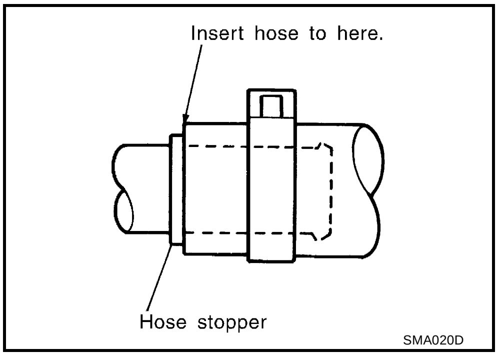

SMA020D

HOSE CLAMPING

- If old rubber hose is re-used, install hose clamp in its original position (at the indentation where the old clamp was). If there is a trace of tube bulging left on the old rubber hose, align rubber hose at that position.
- Discard old clamps; replace with new ones.

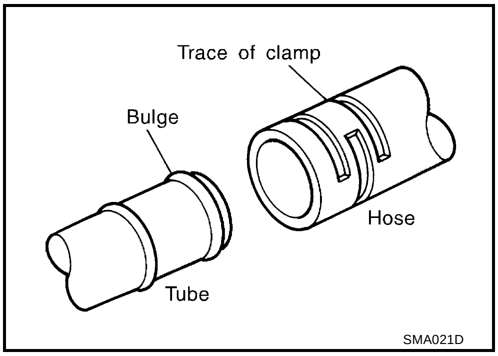

SMA021D

- After installing plate clamps, apply force to them in the direction of the arrow, tightening rubber hose equally all around.

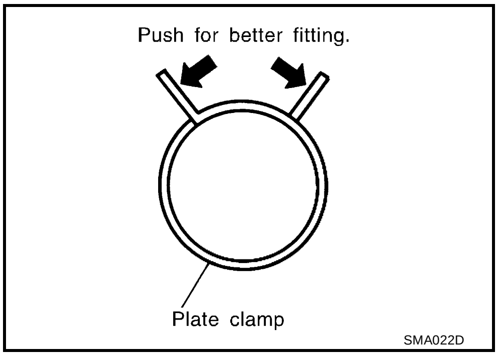

Precautions for Engine Oils

AAS000NK

Prolonged and repeated contact with used engine oil may cause skin cancer. Try to avoid direct skin contact with used oil.
If skin contact is made, wash thoroughly with soap or hand cleaner as soon as possible.

HEALTH PROTECTION PRECAUTIONS

- Avoid prolonged and repeated contact with oils, particularly used engine oils.
- Wear protective clothing, including impervious gloves where practicable.
- Do not put oily rags in pockets.
- Avoid contaminating clothes, particularly underpants, with oil.
- Heavily soiled clothing and oil-impregnated footwear should not be worn. Overalls must be cleaned regularly.
- First aid treatment should be obtained immediately for open cuts and wounds.
- Use barrier creams, applying them before each work period, to help the removal of oil from the skin.
- Wash with soap and water to ensure all oil is removed (skin cleansers and nail brushes will help). Preparations containing lanolin replace the natural skin oils which have been removed.
- Do not use gasoline, kerosene, diesel fuel, gas oil, thinners or solvents for cleaning skin.
- If skin disorders develop, obtain medical advice without delay.
- Where practical, degrease components prior to handling.
- Where there is a risk of eye contact, eye protection should be worn, for example, chemical goggles or face shields; in addition an eye wash facility should be provided.

ENVIRONMENTAL PROTECTION PRECAUTIONS

Dispose of used oil and used oil filters through authorized waste disposal contractors to licensed waste disposal sites, or to the waste oil reclamation trade. If in doubt, contact the local authority for advice on disposal facilities.
It is illegal to pour used oil on to the ground, down sewers or drains, or into water sources.
The regulations concerning pollution vary between regions.

Precautions for Air Conditioning

AAS000NL

Use an approved refrigerant recovery unit any time the air conditioning system must be discharged. Refer to ATC/MTC section “HFC-134a (R-134a) Service Procedure”, “REFRIGERANT LINES” for specific instructions.

HOW TO USE THIS MANUAL

PFP:00008

Description

AAS000NM

This volume explains “Removal, Disassembly, Installation, Inspection and Adjustment” and “Trouble Diagnoses”.

Terms

AAS000NN

- The captions **WARNING** and **CAUTION** warn you of steps that must be followed to prevent personal injury and/or damage to some part of the vehicle.
  WARNING indicates the possibility of personal injury if instructions are not followed.
  CAUTION indicates the possibility of component damage if instructions are not followed.
  BOLD TYPED STATEMENTS except **WARNING** and **CAUTION** give you helpful information.
  Standard value:Tolerance at inspection and adjustment.
  Limit value:The maximum or minimum limit value that should not be exceeded at inspection and adjustment.

Units

AAS000NO

- The **UNITS** given in this manual are primarily expressed as the SI UNIT (International System of Unit), and alternatively expressed in the metric system and in the yard/pound system.
  Also with regard to tightening torque of bolts and nuts, there are descriptions both about range and about the standard tightening torque.

  “Example”
  Range

  Outer Socket Lock Nut : 59 - 78 N·m (6.0 - 8.0 kg-m, 43 - 58 ft-lb)

  Standard

  Drive Shaft Installation Bolt : 44.3 N·m (4.5 kg-m, 33 ft-lb)

Contents

AAS000NP

- **ALPHABETICAL INDEX** is provided at the end of this manual so that you can rapidly find the item and page you are searching for.
- **A QUICK REFERENCE INDEX**, a black tab (e.g. BR) is provided on the first page. You can quickly find the first page of each section by matching it to the section's black tab.
- **THE CONTENTS** are listed on the first page of each section.
- **THE TITLE** is indicated on the upper portion of each page and shows the part or system.
- **THE PAGE NUMBER** of each section consists of two or three letters which designate the particular section and a number (e.g. “BR-5”).
- **THE SMALL ILLUSTRATIONS** show the important steps such as inspection, use of special tools, knacks of work and hidden or tricky steps which are not shown in the previous large illustrations.
  Assembly, inspection and adjustment procedures for the complicated units such as the automatic transaxle or transmission, etc. are presented in a step-by-step format where necessary.

Components

AAS000NQ

- **THE LARGE ILLUSTRATIONS** are exploded views (see the following) and contain tightening torques, lubrication points, section number of the **PARTS CATALOG** (e.g. SEC. 440) and other information necessary to perform repairs.
  The illustrations should be used in reference to service matters only. When ordering parts, refer to the appropriate **PARTS CATALOG** .
  Components shown in an illustration may be identified by a circled number. When this style of illustration is used, the text description of the components will follow the illustration.

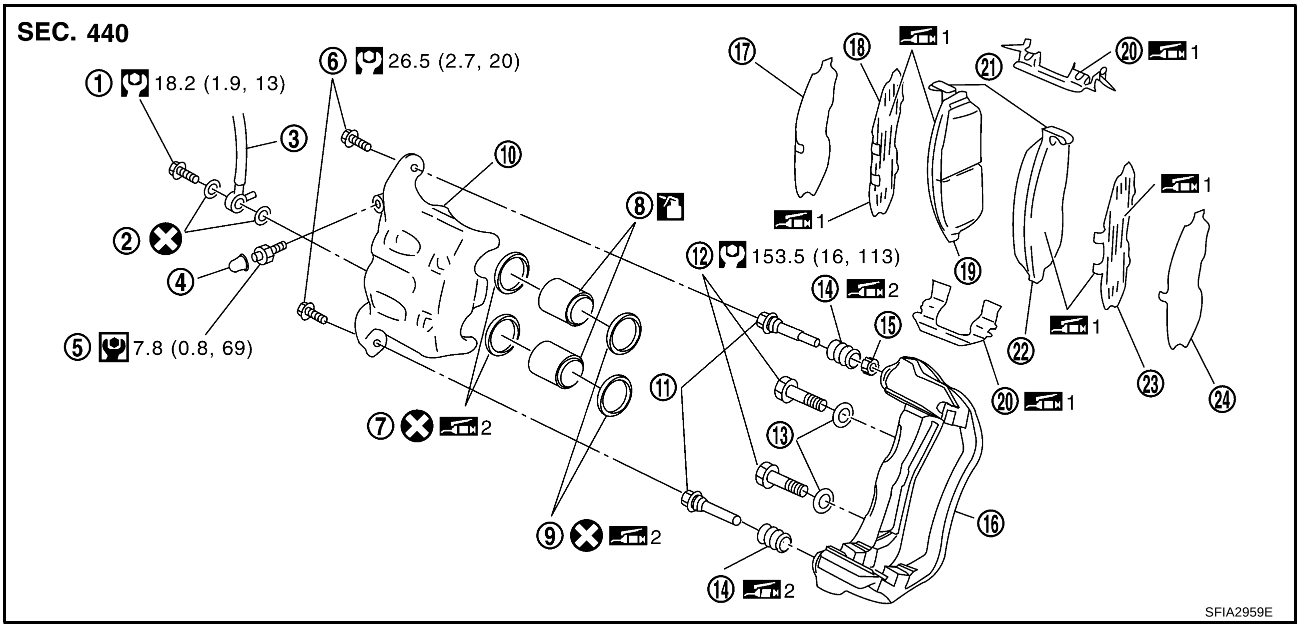

1.	Union bolt	2.	Copper washer	3.	Brake hose
4.	Cap	5.	Bleed valve	6.	Sliding pin bolt
7.	Piston seal	8.	Piston	9.	Piston boot
10.	Cylinder body	11.	Sliding pin	12.	Torque member mounting bolt
13.	Washer	14.	Sliding pin boot	15.	Bushing
16.	Torque member	17.	Inner shim cover	18.	Inner shim
19.	Inner pad	20.	Pad retainer	21.	Pad wear sensor
22.	Outer pad	23.	Outer shim	24.	Outer shim cover
	1: PBC (Poly Butyl Cuprysil) grease or silicone-based grease		2: Rubber grease		: Brake fluid

Refer to GI section for additional symbol definitions.

SYMBOLS

SYMBOL	DESCRIPTION		SYMBOL	DESCRIPTION
	Tightening torque The tightening torque specifications of bolts and nuts may be presented as either a range or a standard tightening torque.	: N•m (kg-m, ft-lb)		Always replace after every disassembly.
		: N•m (kg-m, in-lb)	Ⓟ	Apply petroleum jelly.
	Should be lubricated with grease. Unless otherwise indicated, use recommended multi-purpose grease.		Ⓜ	Apply molybdenum added petroleum jelly.
	Should be lubricated with oil.		ATF	Apply ATF.
	Sealing point		★	Select with proper thickness.
Ⓛ	Sealing point with locking sealant.		☆	Adjustment is required.
	Checking point			

SAIA0749E

How to Follow Trouble Diagnoses

AAS000NR

DESCRIPTION

NOTICE:
Trouble diagnoses indicate work procedures required to diagnose problems effectively. Observe the following instructions before diagnosing.

1. **Before performing trouble diagnoses, read the “Preliminary Check”, the “Symptom Chart” or the “Work Flow”.**
2. **After repairs, re-check that the problem has been completely eliminated.**
3. **Refer to Component Parts and Harness Connector Location for the Systems described in each section for identification/location of components and harness connectors.**
4. **Refer to the Circuit Diagram for quick pinpoint check.**
   If you need to check circuit continuity between harness connectors in more detail, such as when a sub-harness is used, refer to Wiring Diagram in each individual section and Harness Layout in PG section for identification of harness connectors.
5. **When checking circuit continuity, ignition switch should be OFF.**
6. **Before checking voltage at connectors, check battery voltage.**
7. **After accomplishing the Diagnostic Procedures and Electrical Components Inspection, make sure that all harness connectors are reconnected as they were.**

HOW TO FOLLOW TEST GROUPS IN TROUBLE DIAGNOSES

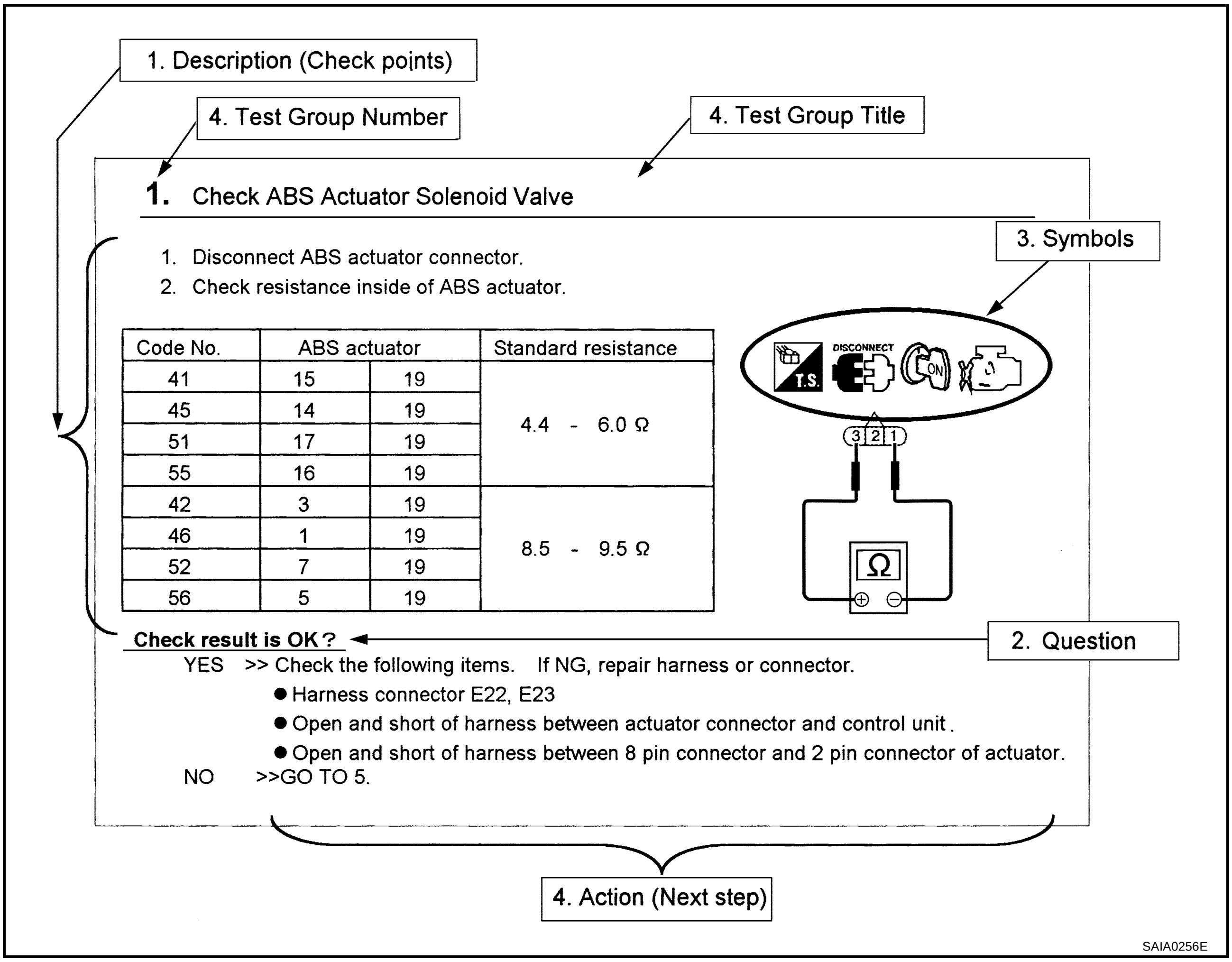

1. **Work and diagnostic procedure**
   Start to diagnose a problem using procedures indicated in enclosed test groups.
2. **Questions and required results**
   Questions and required results are indicated in bold type in test group.
   The meaning of are as follows:

a. Battery voltage → 11 - 14V or approximately 12V
b. Voltage : Approximately 0V → Less than 1V

3. **Symbol used in illustration**
   Symbols included in illustrations refer to measurements or procedures. Before diagnosing a problem, familiarize yourself with each symbol. Refer to "Connector Symbols" in GI Section and "KEY TO SYMBOLS SIGNIFYING MEASUREMENTS OR PROCEDURES" below.
4. **Action items**
   Next action for each test group is indicated based on result of each question. Test group number is shown in the left upper portion of each test group.

HARNESS WIRE COLOR AND CONNECTOR NUMBER INDICATION

There are two types of harness wire color and connector number indication.

TYPE 1: Harness Wire Color and Connector Number are Shown in Illustration

- Letter designations next to test meter probe indicate harness wire color.
- Connector numbers in a single circle (e.g. M33) indicate harness connectors.
- Connector numbers in a double circle (e.g. F211) indicate component connectors.

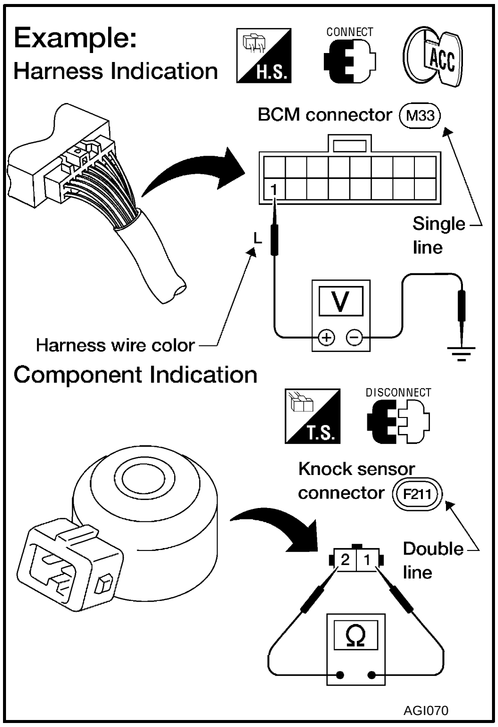

TYPE 2: Harness Wire Color and Connector Number are Shown in Text

Example 1:

2	CHECK INTAKE SENSOR CIRCUIT BETWEEN INTAKE SENSOR AND AUTO AMP. (LCU)

1. Disconnect auto amp. (LCU) harness connector.
2. Check circuit continuity between intake sensor harness connector M59 terminal No. 2 (GW) and auto amp. (LCU) harness connector M56 terminal No. 11 (GW).

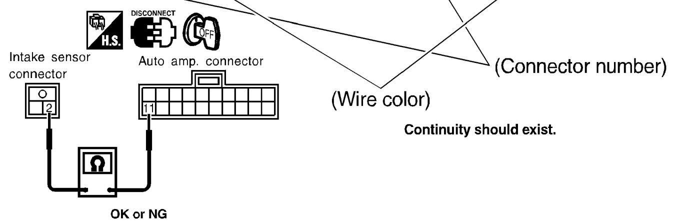

Example 2:

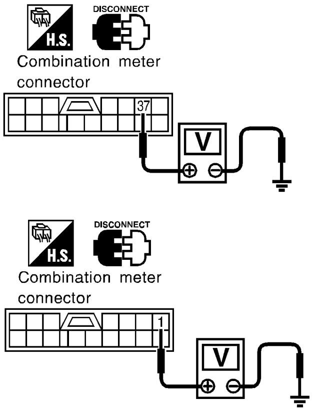

POWER SUPPLY AND GROUND CIRCUIT CHECK

Power Supply Circuit Check

=NCEL00-16S07
NCEL00-16S0701

Terminals			Ignition switch position		
(+)		(–)	OFF	ACC	ON
Connector	Terminal (Wire color)				
M40	37 (Y)	Ground	Battery voltage	Battery voltage	Battery voltage
M41	1 (Y)	Ground	0V	0V	Battery voltage

If NG, check the follwing.
- 7.5A fuse [No. 5, located in fuse block (J/B)]
- 10A fuse [No. 11, located in fuse block (J/B)]
- Harness for open or short between fuse and combination meter

Connector number   Wire color

SGI144A

KEY TO SYMBOLS SIGNIFYING MEASUREMENTS OR PROCEDURES

SYMBOL	DESCRIPTION	SYMBOL	DESCRIPTION
	Check after disconnecting the connector to be measured.		Procedure with Generic Scan Tool. (GST, OBD-II scan tool)
	Check after connecting the connector to be measured.		Procedure without CONSULT, CONSULT-II or GST
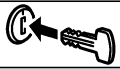	Insert key into ignition switch.		A/C switch is "OFF".
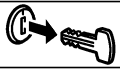	Remove key from ignition switch.	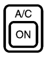	A/C switch is "ON".
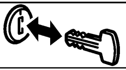	Insert and remove key repeatedly.		REC switch is "ON".
	Turn ignition switch to "OFF" position.		REC switch is "OFF".
	Turn ignition switch to "ACC" position.	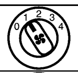	Fan switch is "ON". (At any position except for "OFF" position)
	Turn ignition switch to "ON" position.	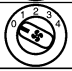	Fan switch is "OFF".
	Turn ignition switch to "START" position.		Apply fuse.
	Turn ignition switch from "OFF" to "ACC" position.	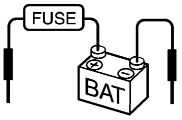	Apply positive voltage from battery with fuse directly to components.
	Turn ignition switch from "ACC" to "ON" position.		
	Turn ignition switch from "ACC" to "OFF" position.		

SAIA0750E

SYMBOL	DESCRIPTION	SYMBOL	DESCRIPTION
	Turn ignition switch from "OFF" to "ON" position.	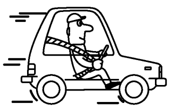	Drive vehicle.
	Turn ignition switch from "ON" to "OFF" position.		
	Do not start engine, or check with engine stopped.	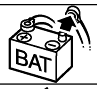	Disconnect battery negative cable.
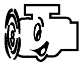	Start engine, or check with engine running.		Depress brake pedal.
	Apply parking brake.		Release brake pedal.
	Release parking brake.		Depress accelerator pedal.
	Check after engine is warmed up sufficiently.	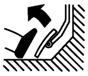	Release accelerator pedal.
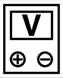	Votage should be measured with a voltmeter.	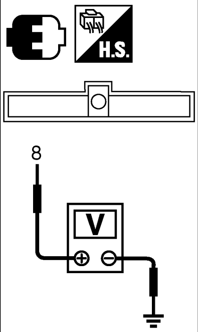	Pin terminal check for SMJ type ECM or TCM connectors. **For details regarding the terminal arrangement, refer to the "ELECTRICAL UNITS" electrical reference page at the end of the manual.**
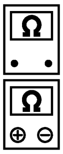	Circuit resistance should be measured with an ohmmeter.		
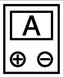	Current should be measured with an ammeter.		
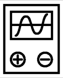	Pulse signal should be checked with an oscilloscope.		
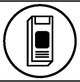	Procedure with CONSULT-II		
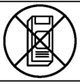	Procedure without CONSULT-II		
	Place selector lever in "P" position.		
	Place selector lever in "N" position.		
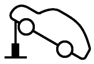	Jack up front portion.		
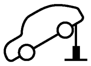	Jack up rear portion.		
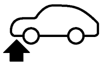	Inspect under engine room.		
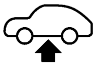	Inspect under floor.		
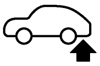	Inspect rear under floor.		

SAIA0751E

How to Read Wiring Diagrams

AAS000NS

CONNECTOR SYMBOLS

Most of connector symbols in wiring diagrams are shown from the terminal side.

- Connector symbols shown from the terminal side are enclosed by a single line and followed by the direction mark.
- Connector symbols shown from the harness side are enclosed by a double line and followed by the direction mark.
- Certain systems and components, especially those related to OBD, may use a new style slide-locking type harness connector. For description and how to disconnect, refer to PG section, “Description”, “HARNESS CONNECTOR”.

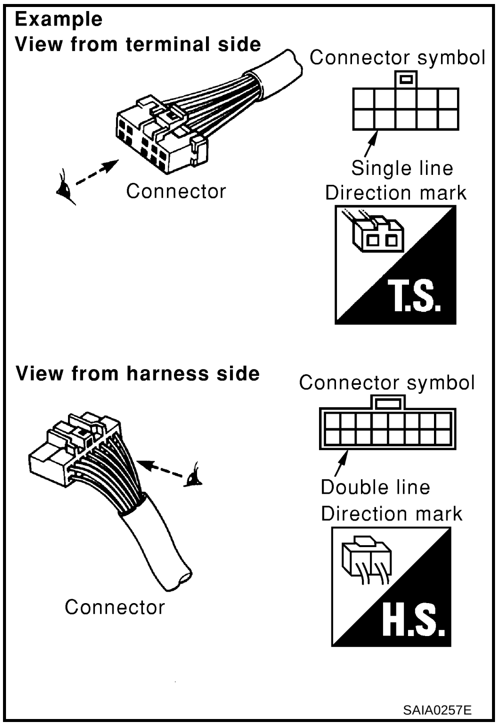

SAIA0257E

- Male and female terminals
  Connector guides for male terminals are shown in black and female terminals in white in wiring diagrams.

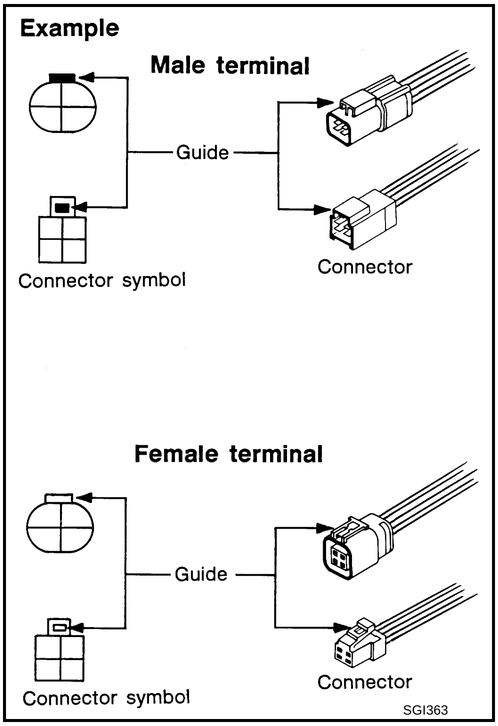

SGI363

SAMPLE/WIRING DIAGRAM - EXAMPL -

- For detail, refer to following “DESCRIPTION”.

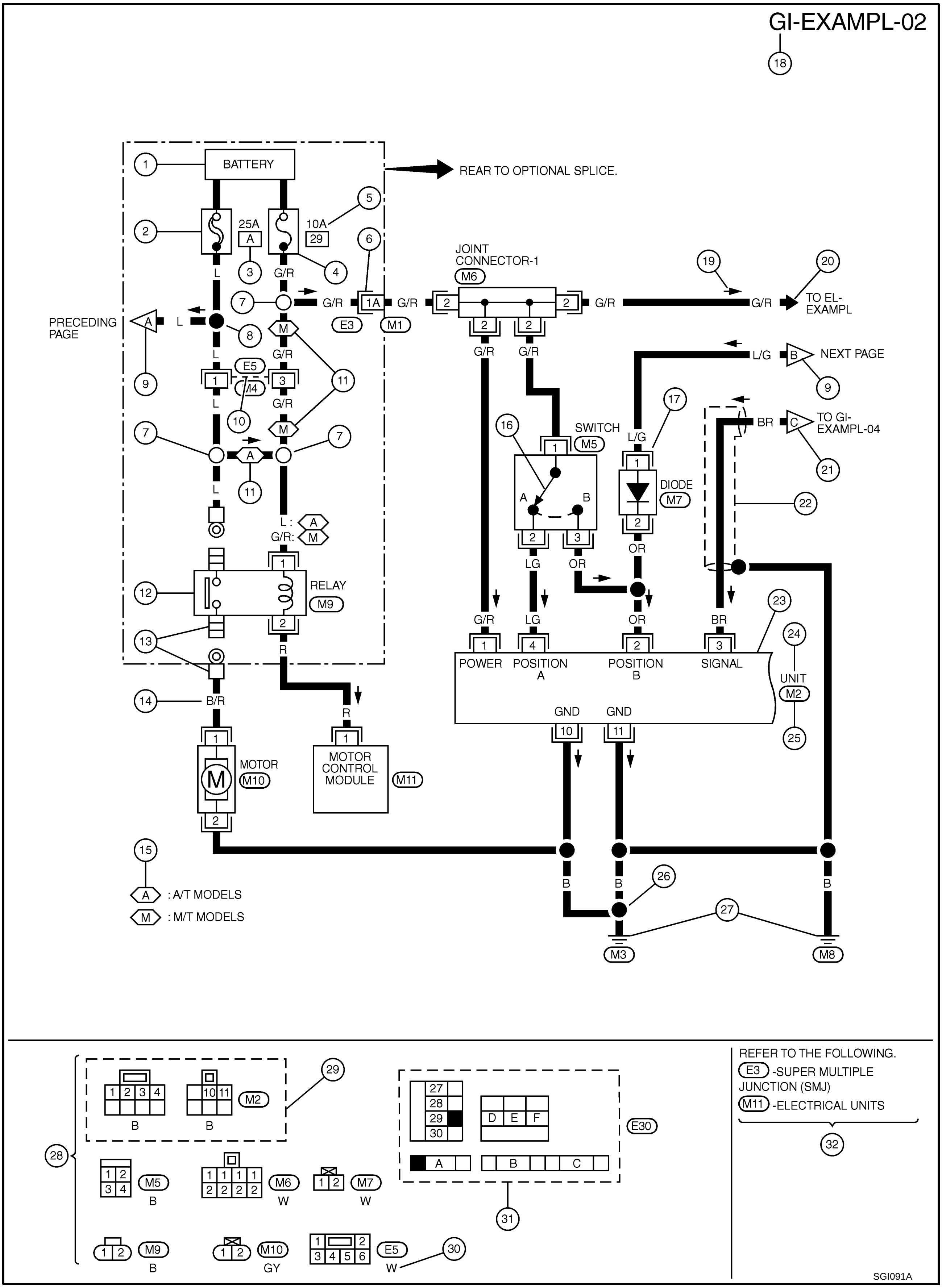

Optional Splice

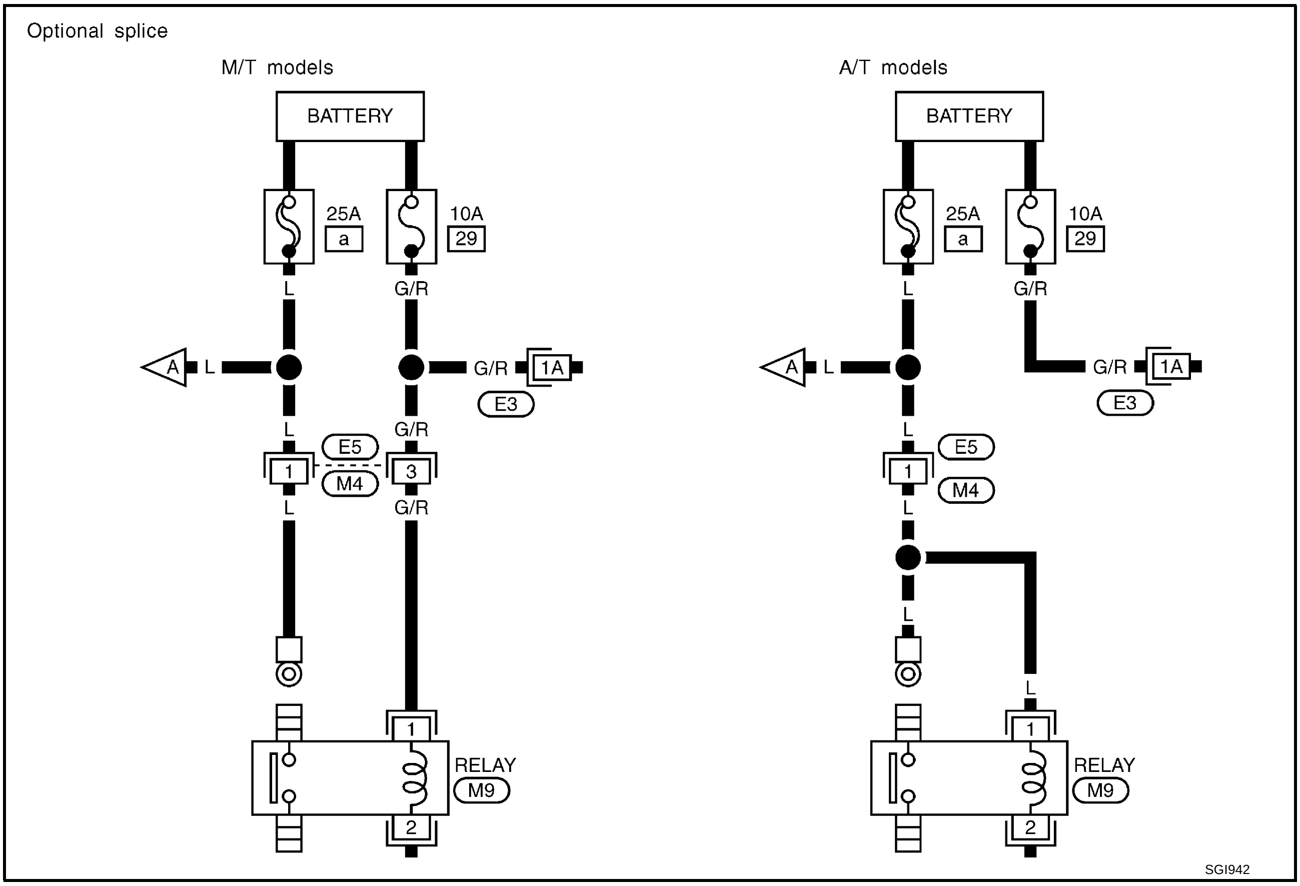

DESCRIPTION

Number	Item	Description
1	Power condition	● This shows the condition when the system receives battery positive voltage (can be operated).
2	Fusible link	● The double line shows that this is a fusible link. ● The open circle shows current flow in, and the shaded circle shows current flow out.
3	Fusible link/fuse location	● This shows the location of the fusible link or fuse in the fusible link or fuse box. For arrangement, refer to PG section, POWER SUPPLY ROUTING.
4	Fuse	● The single line shows that this is a fuse. ● The open circle shows current flow in, and the shaded circle shows current flow out.
5	Current rating	● This shows the current rating of the fusible link or fuse.
6	Connectors	● This shows that connector E3 is female and connector M1 is male. ● The G/R wire is located in the 1A terminal of both connectors. ● Terminal number with an alphabet (1A, 5B, etc.) indicates that the connector is SMJ connector. Refer to PG section, SMJ (SUPER MULTIPLE JUNCTION).
7	Optional splice	● The open circle shows that the splice is optional depending on vehicle application.
8	Splice	● The shaded circle shows that the splice is always on the vehicle.
9	Page crossing	● This arrow shows that the circuit continues to an adjacent page. ● The A will match with the A on the preceding or next page.
10	Common connector	● The dotted lines between terminals show that these terminals are part of the same connector.
11	Option abbreviation	● This shows that the circuit is optional depending on vehicle application.
12	Relay	● This shows an internal representation of the relay. For details, refer to PG section, STANDARDIZED RELAY.
13	Connectors	● This shows that the connector is connected to the body or a terminal with bolt or nut.

Num-ber	Item	Description
14	Wire color	● This shows a code for the color of the wire. B = Black W = White R = Red G = Green L = Blue Y = Yellow LG = Light Green BR = Brown OR or O = Orange P = Pink PU or V (Violet) = Purple GY or GR = Gray SB = Sky Blue CH = Dark Brown DG = Dark Green When the wire color is striped, the base color is given first, followed by the stripe color as shown below: Example: L/W = Blue with White Stripe
15	Option description	● This shows a description of the option abbreviation used on the page.
16	Switch	● This shows that continuity exists between terminals 1 and 2 when the switch is in the A position. Continuity exists between terminals 1 and 3 when the switch is in the B position.
17	Assembly parts	● Connector terminal in component shows that it is a harness incorporated assembly.
18	Cell code	● This identifies each page of the wiring diagram by section, system and wiring diagram page number.
19	Current flow arrow	● Arrow indicates electric current flow, especially where the direction of standard flow (vertically downward or horizontally from left to right) is difficult to follow. ● A double arrow “ ↔ ” shows that current can flow in either direction depending on circuit operation.
20	System branch	● This shows that the system branches to another system identified by cell code (section and system).
21	Page crossing	● This arrow shows that the circuit continues to another page identified by cell code. ● The C will match with the C on another page within the system other than the next or preceding pages.
22	Shielded line	● The line enclosed by broken line circle shows shield wire.
23	Component box in wave line	● This shows that another part of the component is also shown on another page (indicated by wave line) within the system.
24	Component name	● This shows the name of a component.
25	Connector number	● This shows the connector number. ● The letter shows which harness the connector is located in. ● Example: **M** : main harness. For detail and to locate the connector, refer to PG section "Main Harness", “Harness Layout”. A coordinate grid is included for complex harnesses to aid in locating connectors.
26	Ground (GND)	● The line spliced and grounded under wire color shows that ground line is spliced at the grounded connector.
27	Ground (GND)	● This shows the ground connection. For detailed ground distribution information, refer to "Ground Distribution" in PG section.
28	Connector views	● This area shows the connector faces of the components in the wiring diagram on the page.
29	Common component	● Connectors enclosed in broken line show that these connectors belong to the same component.
30	Connector color	● This shows a code for the color of the connector. For code meaning, refer to wire color codes, Number 14 of this chart.
31	Fusible link and fuse box	● This shows the arrangement of fusible link(s) and fuse(s), used for connector views of "POWER SUPPLY ROUTING" in PG section. The open square shows current flow in, and the shaded square shows current flow out.
32	Reference area	● This shows that more information on the Super Multiple Junction (SMJ) and Joint Connectors (J/C) exists on the PG section. Refer to "Reference Area" for details.

Harness Indication

- Letter designations next to test meter probe indicate harness (connector) wire color.
- Connector numbers in a single circle M33 indicate harness connectors.

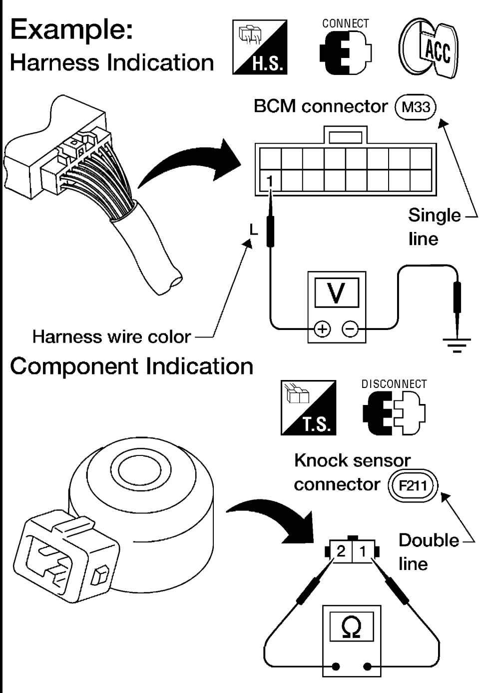

AGI070

Component Indication

Connector numbers in a double circle F211 indicate component connectors.

Switch Positions

Switches are shown in wiring diagrams as if the vehicle is in the “normal” condition.
A vehicle is in the “normal” condition when:

- ignition switch is “OFF”,
- doors, hood and trunk lid/back door are closed,
- pedals are not depressed, and
- parking brake is released.

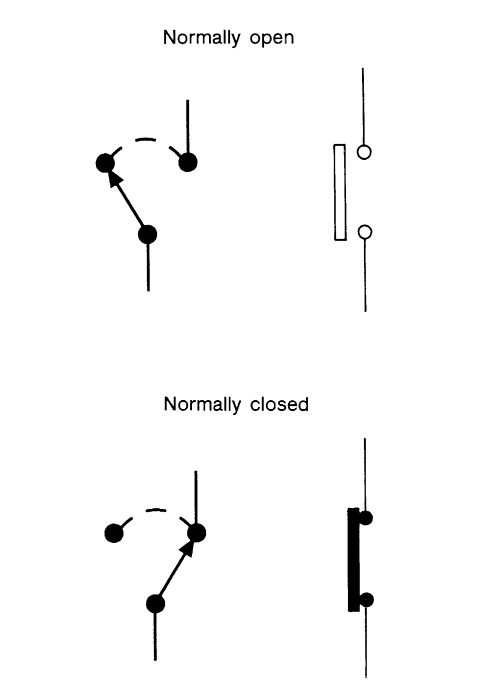

SGI860

Detectable Lines and Non-Detectable Lines

In some wiring diagrams, two kinds of lines, representing wires, with different weight are used.

- A line with regular weight (wider line) represents a “detectable line for DTC (Diagnostic Trouble Code)”. A “detectable line for DTC” is a circuit in which ECM can detect its malfunctions with the on board diagnostic system.
- A line with less weight (thinner line) represents a “non-detectable line for DTC”. A “non-detectable line for DTC” is a circuit in which ECM cannot detect its malfunctions with the on board diagnostic system.

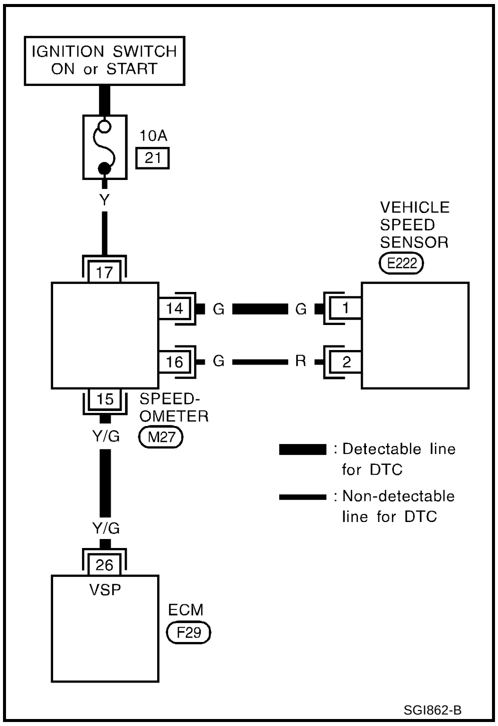

Multiple Switch

The continuity of multiple switch is described in two ways as shown below.

- The switch chart is used in schematic diagrams.
- The switch diagram is used in wiring diagrams.

Example

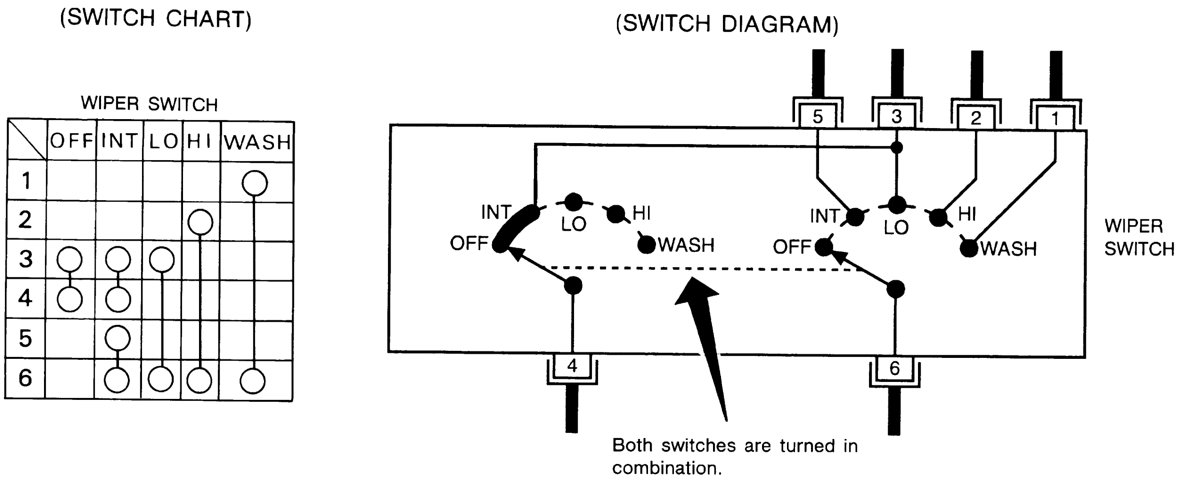

Continuity circuit of wiper switch

SWITCH POSITION	CONTINUITY CIRCUIT
OFF	3-4
INT	3-4,5-6
LO	3-6
HI	2-6
WASH	1-6

SGI875

Reference Area

The Reference Area of the wiring diagram contains references to additional electrical reference pages at the end of the manual. If connector numbers and titles are shown in the Reference Area of the wiring diagram, these connector symbols are not shown in the Connector Area.

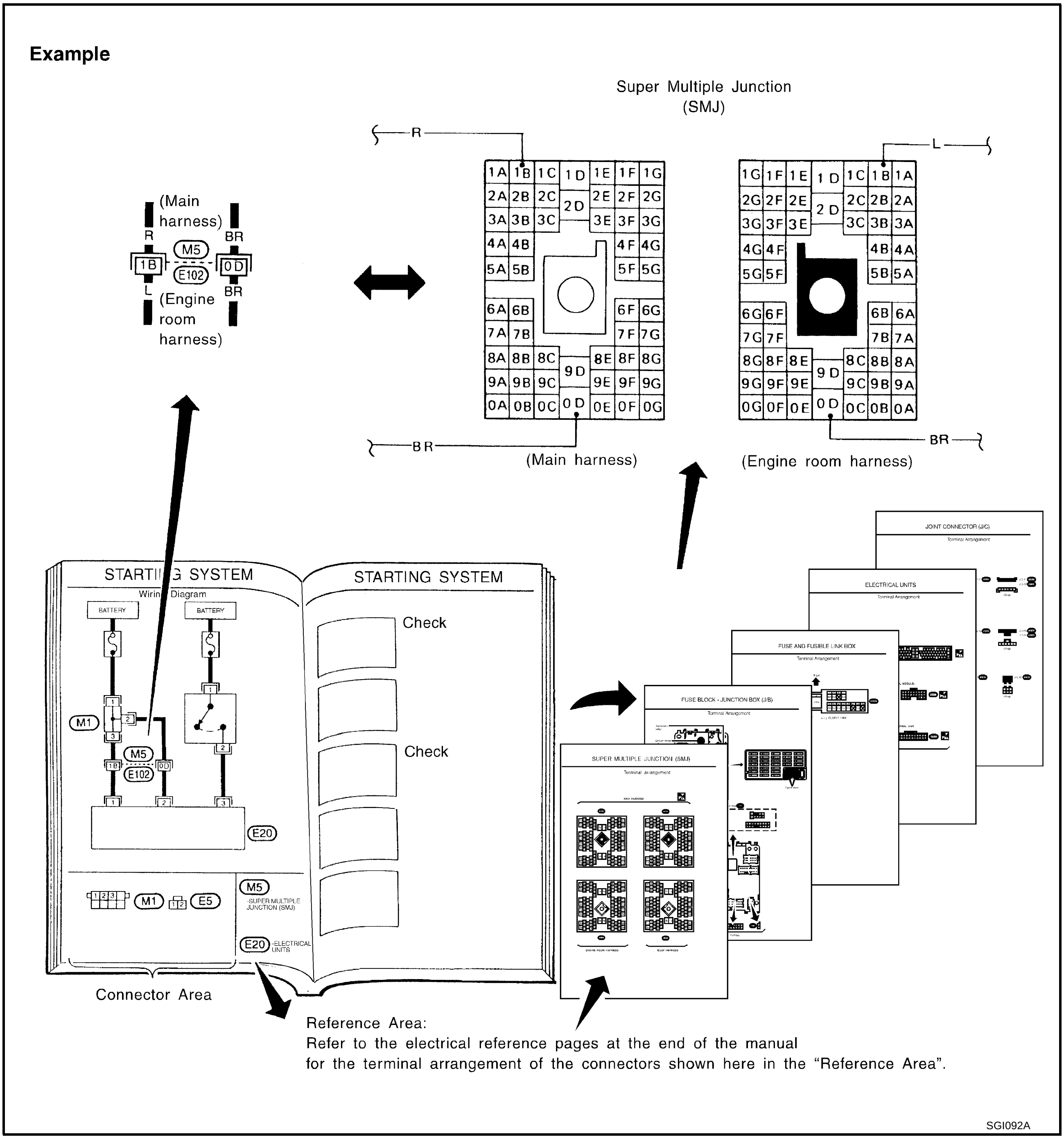

Abbreviations

AAS000NT

The following **ABBREVIATIONS** are used:

ABBREVIATION	DESCRIPTION
A/C	Air Conditioner
A/T	Automatic Transaxle/Transmission
ATF	Automatic Transmission Fluid
D_1	Drive range 1st gear
D_2	Drive range 2nd gear
D_3	Drive range 3rd gear
D_4	Drive range 4th gear
FR, RR	Front, Rear
LH, RH	Left-Hand, Right-Hand
M/T	Manual Transaxle/Transmission
OD	Overdrive
P/S	Power Steering
SAE	Society of Automotive Engineers, Inc.
SDS	Service Data and Specifications
SST	Special Service Tools
2WD	2-Wheel Drive
2_2	2nd range 2nd gear
2_1	2nd range 1st gear
1_2	1st range 2nd gear
1_1	1st range 1st gear

SERVICE INFORMATION FOR ELECTRICAL INCIDENT

PFP:00000

How to Check Terminal

AAS000NU

CONNECTOR AND TERMINAL PIN KIT

Use the connector and terminal pin kits listed below when replacing connectors or terminals.
The connector and terminal pin kits contain some of the most commonly used NISSAN/INFINITI connectors and terminals. For detailed connector and terminal pin replacement procedures, refer to the latest NISSAN/INFINITI CONNECTOR AND TERMINAL PIN SERVICE MANUAL.

Tool number (Kent-Moore No.) Tool name	Description
- (J38751-95NI) Connector and terminal pin kit (NISSAN) - (J38751-95INF) Connector and terminal pin kit (INFINITI) - (J42992-98KIT) OBD and terminal repair kit - (J42992-2000UPD) OBD-II Connector Kit Update	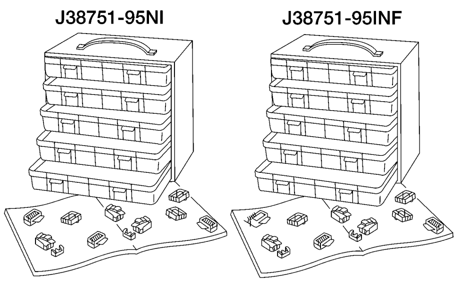 WAIA0004E 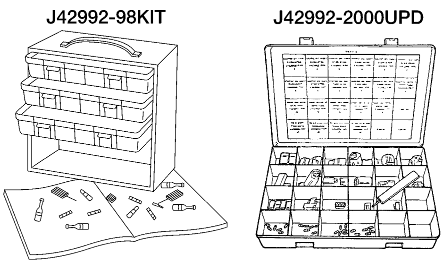 WAIA0005E

HOW TO PROBE CONNECTORS

Connector damage and an intermittent connection can result from improperly probing of the connector during circuit checks.
The probe of a digital multimeter (DMM) may not correctly fit the connector cavity. To correctly probe the connector, follow the procedures below using a “T” pin. For the best contact grasp the “T” pin using an alligator clip.

Probing from Harness Side

Standard type (not waterproof type) connector should be probed from harness side with “T” pin.

- If the connector has a rear cover such as a ECM connector, remove the rear cover before probing the terminal.
- Do not probe waterproof connector from harness side. Damage to the seal between wire and connector may result.

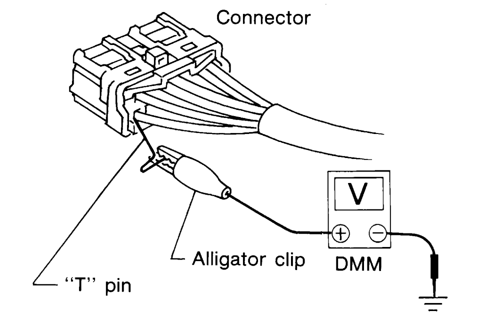

SGI841

Probing from Terminal Side

FEMALE TERMINAL

- There is a small notch above each female terminal. Probe each terminal with the “T” pin through the notch.
  Do not insert any object other than the same type male terminal into female terminal.

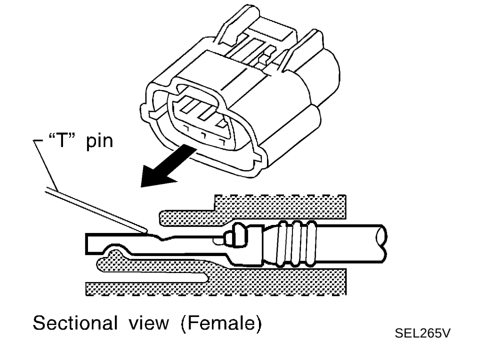

SEL265V

- Some connectors do not have a notch above each terminal. To probe each terminal, remove the connector retainer to make contact space for probing.

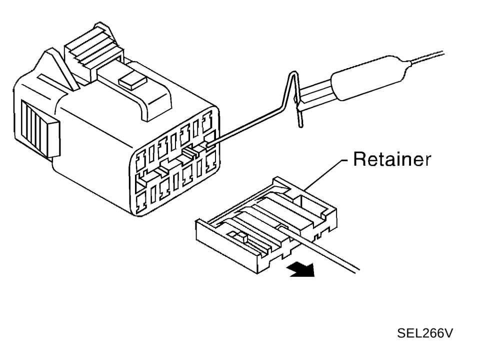

SEL266V

MALE TERMINAL
Carefully probe the contact surface of each terminal using a “T” pin.
Do not bend terminal.

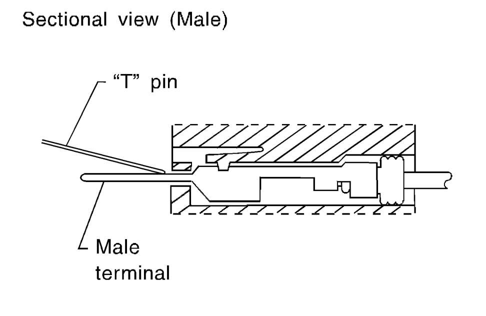

SEL267V

How to Check Enlarged Contact Spring of Terminal

An enlarged contact spring of a terminal may create intermittent signals in the circuit.
If the intermittent open circuit occurs, follow the procedure below to inspect for open wires and enlarged contact spring of female terminal.

1. Assemble a male terminal and approx. 10 cm (3.9 in) of wire. **Use a male terminal which matches the female terminal.**
2. Disconnect the suspected faulty connector and hold it terminal side up.

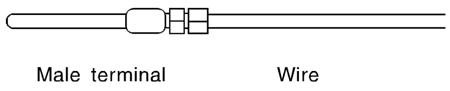

SEL270V

3. While holding the wire of the male terminal, try to insert the male terminal into the female terminal. **Do not force the male terminal into the female terminal with your hands.**

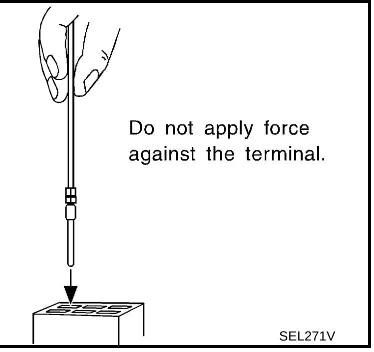

SEL271V

4. While moving the connector, check whether the male terminal can be easily inserted or not.

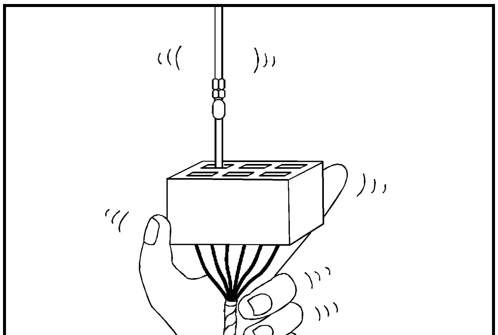

SEL272V

- If the male terminal can be easily inserted into the female terminal, replace the female terminal.

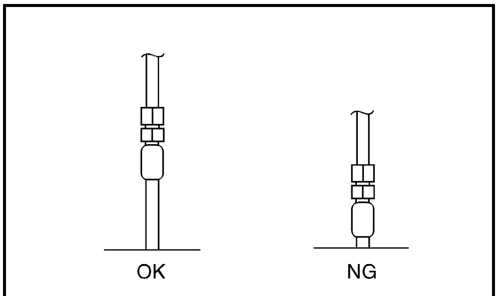

SEL273V

Waterproof Connector Inspection

If water enters the connector, it can short interior circuits. This may lead to intermittent problems.
Check the following items to maintain the original waterproof characteristics.

RUBBER SEAL INSPECTION

- Most waterproof connectors are provided with a rubber seal between the male and female connectors. If the seal is missing, the waterproof performance may not meet specifications.
- The rubber seal may come off when connectors are disconnected. Whenever connectors are reconnected, make sure the rubber seal is properly installed on either side of male or female connector.

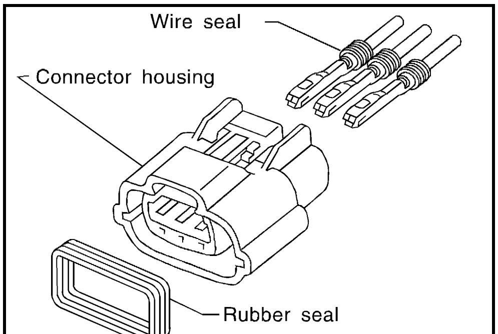

SEL275V

WIRE SEAL INSPECTION

The wire seal must be installed on the wire insertion area of a waterproof connector. Be sure that the seal is installed properly.

Terminal Lock Inspection

Check for unlocked terminals by pulling wire at the end of connector.
An unlocked terminal may create intermittent signals in the circuit.

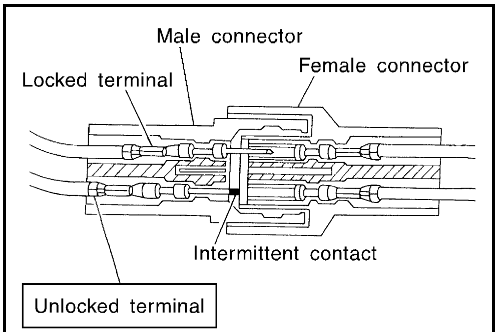

SEL330V

How to Perform Efficient Diagnosis for an Electrical Incident

AAS000NV

WORK FLOW

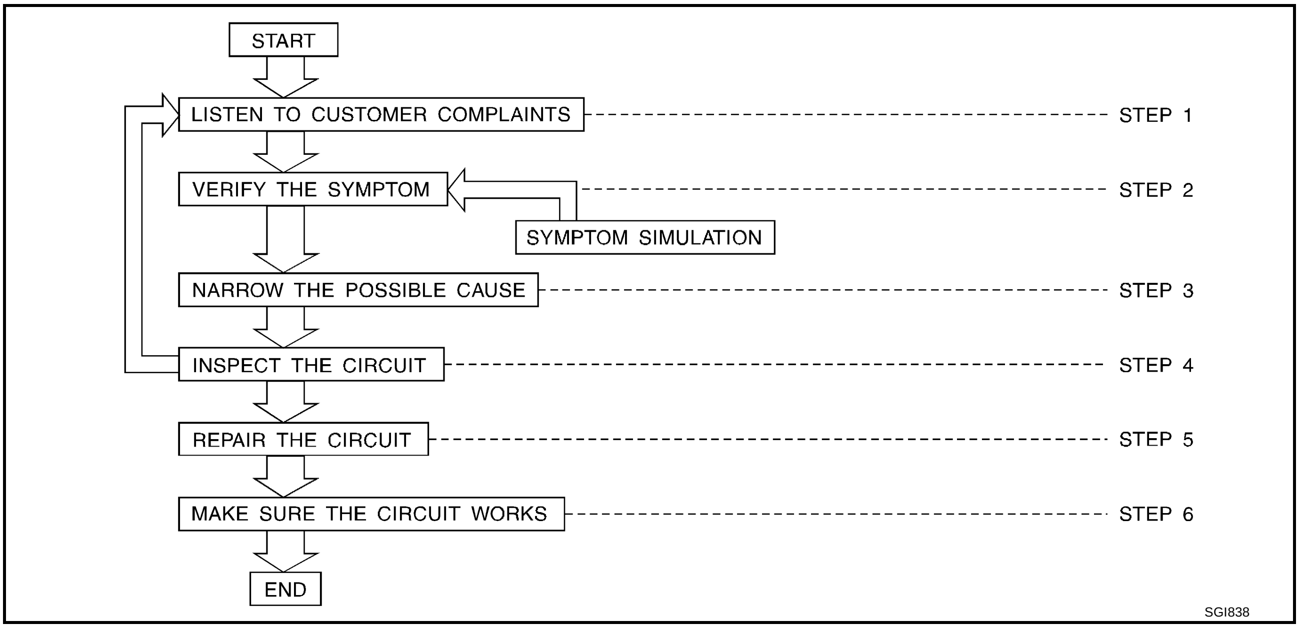

STEP	DESCRIPTION	
STEP 1	Get detailed information about the conditions and the environment when the incident occurred. The following are key pieces of information required to make a good analysis:	
	WHAT	Vehicle Model, Engine, Transmission/Transaxle and the System (i.e. Radio).
	WHEN	Date, Time of Day, Weather Conditions, Frequency.
	WHERE	Road Conditions, Altitude and Traffic Situation.
	HOW	System Symptoms, Operating Conditions (Other Components Interaction). Service History and if any After Market Accessories have been installed.
STEP 2	Operate the system, road test if necessary. Verify the parameter of the incident. If the problem cannot be duplicated, refer to “Incident Simulation Tests”.	
STEP 3	Get the proper diagnosis materials together including: ● Power Supply Routing ● System Operation Descriptions ● Applicable Service Manual Sections ● Check for any Service Bulletins Identify where to begin diagnosis based upon your knowledge of the system operation and the customer comments.	
STEP 4	Inspect the system for mechanical binding, loose connectors or wiring damage. Determine which circuits and components are involved and diagnose using the Power Supply Routing and Harness Layouts.	
STEP 5	Repair or replace the incident circuit or component.	
STEP 6	Operate the system in all modes. Verify the system works properly under all conditions. Make sure you have not inadvertently created a new incident during your diagnosis or repair steps.	

INCIDENT SIMULATION TESTS

Introduction

Sometimes the symptom is not present when the vehicle is brought in for service. If possible, re-create the conditions present at the time of the incident. Doing so may help avoid a No Trouble Found Diagnosis. The following section illustrates ways to simulate the conditions/environment under which the owner experiences an electrical incident.

The section is broken into the six following topics:

- Vehicle vibration
- Heat sensitive

- Freezing
- Water intrusion
- Electrical load
- Cold or hot start up

Get a thorough description of the incident from the customer. It is important for simulating the conditions of the problem.

Vehicle Vibration

The problem may occur or become worse while driving on a rough road or when engine is vibrating (idle with A/C on). In such a case, you will want to check for a vibration related condition. Refer to the following illustration.

CONNECTORS & HARNESS

Determine which connectors and wiring harness would affect the electrical system you are inspecting. Gently shake each connector and harness while monitoring the system for the incident you are trying to duplicate. This test may indicate a loose or poor electrical connection.

HINT

Connectors can be exposed to moisture. It is possible to get a thin film of corrosion on the connector terminals. A visual inspection may not reveal this without disconnecting the connector. If the problem occurs intermittently, perhaps the problem is caused by corrosion. It is a good idea to disconnect, inspect and clean the terminals on related connectors in the system.

SENSORS & RELAYS

Gently apply a slight vibration to sensors and relays in the system you are inspecting.
This test may indicate a loose or poorly mounted sensor or relay.

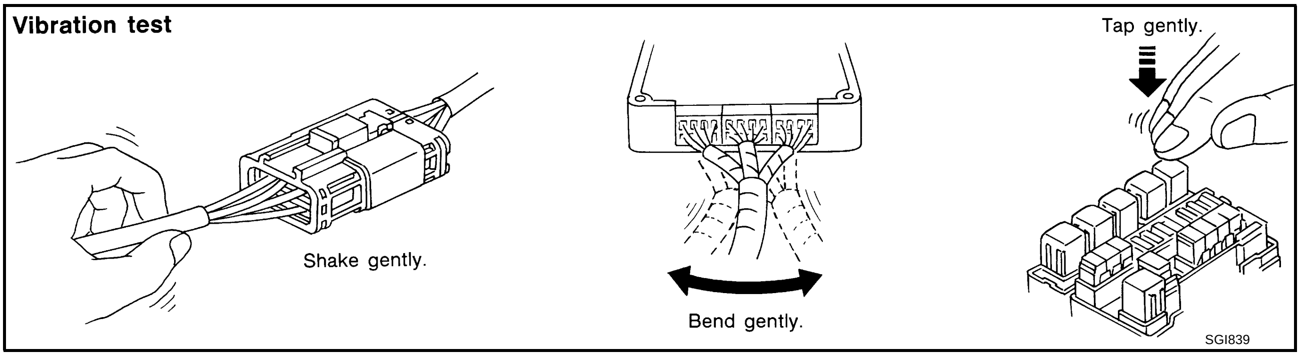

ENGINE COMPARTMENT

There are several reasons a vehicle or engine vibration could cause an electrical complaint. Some of the things to check for are:

- Connectors not fully seated.
- Wiring harness not long enough and is being stressed due to engine vibrations or rocking.
- Wires laying across brackets or moving components.
- Loose, dirty or corroded ground wires.
- Wires routed too close to hot components.

To inspect components under the hood, start by verifying the integrity of ground connections. (Refer to Ground Inspection described later.) First check that the system is properly grounded. Then check for loose connection by gently shaking the wiring or components as previously explained. Using the wiring diagrams inspect the wiring for continuity.

BEHIND THE INSTRUMENT PANEL

An improperly routed or improperly clamped harness can become pinched during accessory installation. Vehicle vibration can aggravate a harness which is routed along a bracket or near a screw.

UNDER SEATING AREAS

An unclamped or loose harness can cause wiring to be pinched by seat components (such as slide guides) during vehicle vibration. If the wiring runs under seating areas, inspect wire routing for possible damage or pinching.

Heat Sensitive

The customer's concern may occur during hot weather or after car has sat for a short time. In such cases you will want to check for a heat sensitive condition.

To determine if an electrical component is heat sensitive, heat the component with a heat gun or equivalent.

Do not heat components above 60°C (140°F). If incident occurs while heating the unit, either replace or properly insulate the component.

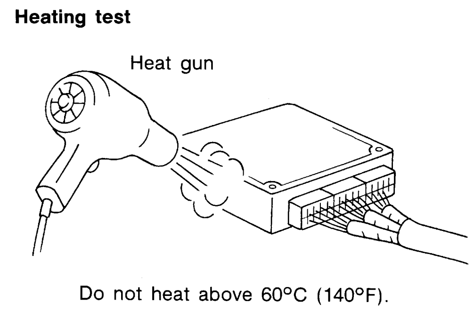

SGI842

Freezing

The customer may indicate the incident goes away after the car warms up (winter time). The cause could be related to water freezing somewhere in the wiring/electrical system.

There are two methods to check for this. The first is to arrange for the owner to leave his car overnight. Make sure it will get cold enough to demonstrate his complaint. Leave the car parked outside overnight. In the morning, do a quick and thorough diagnosis of those electrical components which could be affected.

The second method is to put the suspect component into a freezer long enough for any water to freeze. Reinstall the part into the car and check for the reoccurrence of the incident. If it occurs, repair or replace the component.

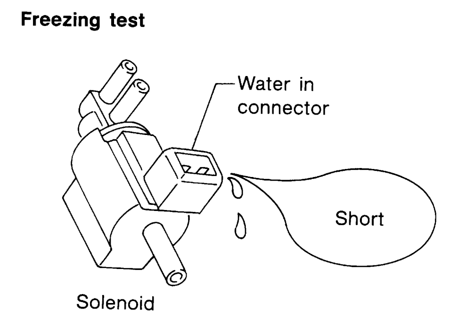

SGI843

Water Intrusion

The incident may occur only during high humidity or in rainy/snowy weather. In such cases the incident could be caused by water intrusion on an electrical part. This can be simulated by soaking the car or running it through a car wash.

Do not spray water directly on any electrical components.

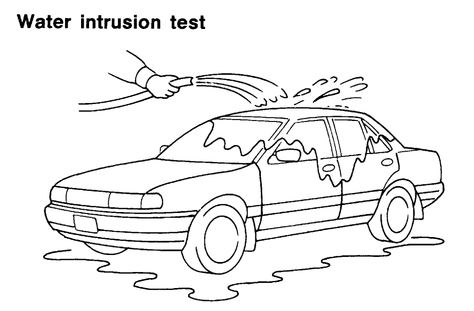

SGI844

Electrical Load

The incident may be electrical load sensitive. Perform diagnosis with all accessories (including A/C, rear window defogger, radio, fog lamps) turned on.

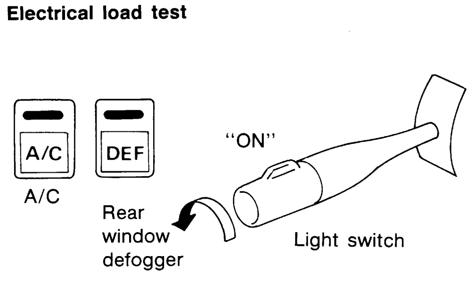

SGI845

Cold or Hot Start Up

On some occasions an electrical incident may occur only when the car is started cold, or it may occur when the car is restarted hot shortly after being turned off. In these cases you may have to keep the car overnight to make a proper diagnosis.

CIRCUIT INSPECTION

Introduction

In general, testing electrical circuits is an easy task if it is approached in a logical and organized method. Before beginning it is important to have all available information on the system to be tested. Also, get a thorough understanding of system operation. Then you will be able to use the appropriate equipment and follow the correct test procedure.
You may have to simulate vehicle vibrations while testing electrical components. Gently shake the wiring harness or electrical component to do this.

OPEN	A circuit is open when there is no continuity through a section of the circuit.	
SHORT	There are two types of shorts.	
	● SHORT CIRCUIT	When a circuit contacts another circuit and causes the normal resistance to change.
	● SHORT TO GROUND	When a circuit contacts a ground source and grounds the circuit.

NOTE:
Refer to “How to Check Terminal” to probe or check terminal.

Testing for “Opens” in the Circuit

Before you begin to diagnose and test the system, you should rough sketch a schematic of the system. This will help you to logically walk through the diagnosis process. Drawing the sketch will also reinforce your working knowledge of the system.

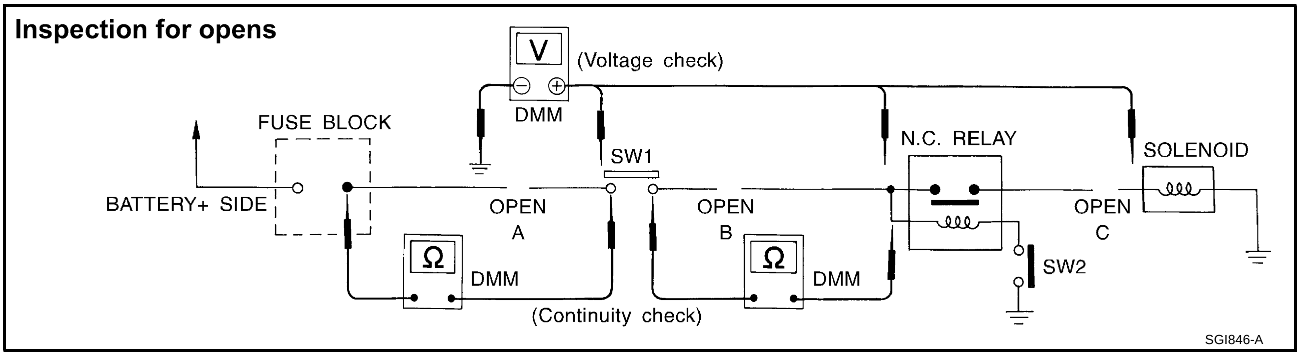

CONTINUITY CHECK METHOD

The continuity check is used to find an open in the circuit. The digital multimeter (DMM) set on the resistance function will indicate an open circuit as over limit (no beep tone or no ohms symbol). Make sure to always start with the DMM at the highest resistance level.
To help in understanding the diagnosis of open circuits, please refer to the previous schematic.

- Disconnect the battery negative cable.
- Start at one end of the circuit and work your way to the other end. (At the fuse block in this example)
- Connect one probe of the DMM to the fuse block terminal on the load side.
- Connect the other probe to the fuse block (power) side of SW1. Little or no resistance will indicate that portion of the circuit has good continuity. If there were an open in the circuit, the DMM would indicate an over limit or infinite resistance condition. (point A)
- Connect the probes between SW1 and the relay. Little or no resistance will indicate that portion of the circuit has good continuity. If there were an open in the circuit, the DMM would indicate an over limit or infinite resistance condition. (point B)
- Connect the probes between the relay and the solenoid. Little or no resistance will indicate that portion of the circuit has good continuity. If there were an open in the circuit, the DMM would indicate an over limit or infinite resistance condition. (point C)

Any circuit can be diagnosed using the approach in the previous example.

VOLTAGE CHECK METHOD

To help in understanding the diagnosis of open circuits please refer to the previous schematic.
In any powered circuit, an open can be found by methodically checking the system for the presence of voltage. This is done by switching the DMM to the voltage function.

- Connect one probe of the DMM to a known good ground.
- Begin probing at one end of the circuit and work your way to the other end.
- With SW1 open, probe at SW1 to check for voltage.
  voltage; open is further down the circuit than SW1.
  no voltage; open is between fuse block and SW1 (point A).
- Close SW1 and probe at relay.
  voltage; open is further down the circuit than the relay.
  no voltage; open is between SW1 and relay (point B).
- Close the relay and probe at the solenoid.
  voltage; open is further down the circuit than the solenoid.
  no voltage; open is between relay and solenoid (point C).

Any powered circuit can be diagnosed using the approach in the previous example.

Testing for "Shorts" in the Circuit

To simplify the discussion of shorts in the system, please refer to the following schematic.

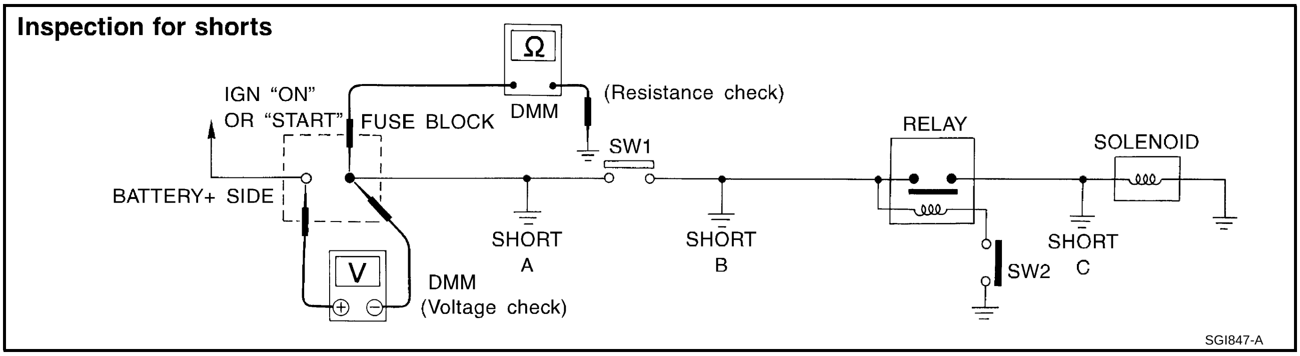

RESISTANCE CHECK METHOD

- Disconnect the battery negative cable and remove the blown fuse.
- Disconnect all loads (SW1 open, relay disconnected and solenoid disconnected) powered through the fuse.
- Connect one probe of the DMM to the load side of the fuse terminal. Connect the other probe to a known good ground.
- With SW1 open, check for continuity.
  continuity; short is between fuse terminal and SW1 (point A).
  no continuity; short is further down the circuit than SW1.
- Close SW1 and disconnect the relay. Put probes at the load side of fuse terminal and a known good ground. Then, check for continuity.
  continuity; short is between SW1 and the relay (point B).
  no continuity; short is further down the circuit than the relay.
- Close SW1 and jump the relay contacts with jumper wire. Put probes at the load side of fuse terminal and a known good ground. Then, check for continuity.
  continuity; short is between relay and solenoid (point C).
  no continuity; check solenoid, retrace steps.

VOLTAGE CHECK METHOD

- Remove the blown fuse and disconnect all loads (i.e. SW1 open, relay disconnected and solenoid disconnected) powered through the fuse.
- Turn the ignition key to the ON or START position. Verify battery voltage at the battery + side of the fuse terminal (one lead on the battery + terminal side of the fuse block and one lead on a known good ground).
- With SW1 open and the DMM leads across both fuse terminals, check for voltage.
  voltage; short is between fuse block and SW1 (point A).

no voltage; short is further down the circuit than SW1.

- With SW1 closed, relay and solenoid disconnected and the DMM leads across both fuse terminals, check for voltage.
  voltage; short is between SW1 and the relay (point B).
  no voltage; short is further down the circuit than the relay.
- With SW1 closed, relay contacts jumped with fused jumper wire check for voltage.
  voltage; short is down the circuit of the relay or between the relay and the disconnected solenoid (point C).
  no voltage; retrace steps and check power to fuse block.

Ground Inspection

Ground connections are very important to the proper operation of electrical and electronic circuits. Ground connections are often exposed to moisture, dirt and other corrosive elements. The corrosion (rust) can become an unwanted resistance. This unwanted resistance can change the way a circuit works.
Electronically controlled circuits are very sensitive to proper grounding. A loose or corroded ground can drastically affect an electronically controlled circuit. A poor or corroded ground can easily affect the circuit. Even when the ground connection looks clean, there can be a thin film of rust on the surface.
When inspecting a ground connection follow these rules:

- Remove the ground bolt or screw.
- Inspect all mating surfaces for tarnish, dirt, rust, etc.
- Clean as required to assure good contact.
- Reinstall bolt or screw securely.
- Inspect for “add-on” accessories which may be interfering with the ground circuit.
- If several wires are crimped into one ground eyelet terminal, check for proper crimps. Make sure all of the wires are clean, securely fastened and providing a good ground path. If multiple wires are cased in one eyelet make sure no ground wires have excess wire insulation.

For detailed ground distribution information, refer to “Ground Distribution” in PG section.

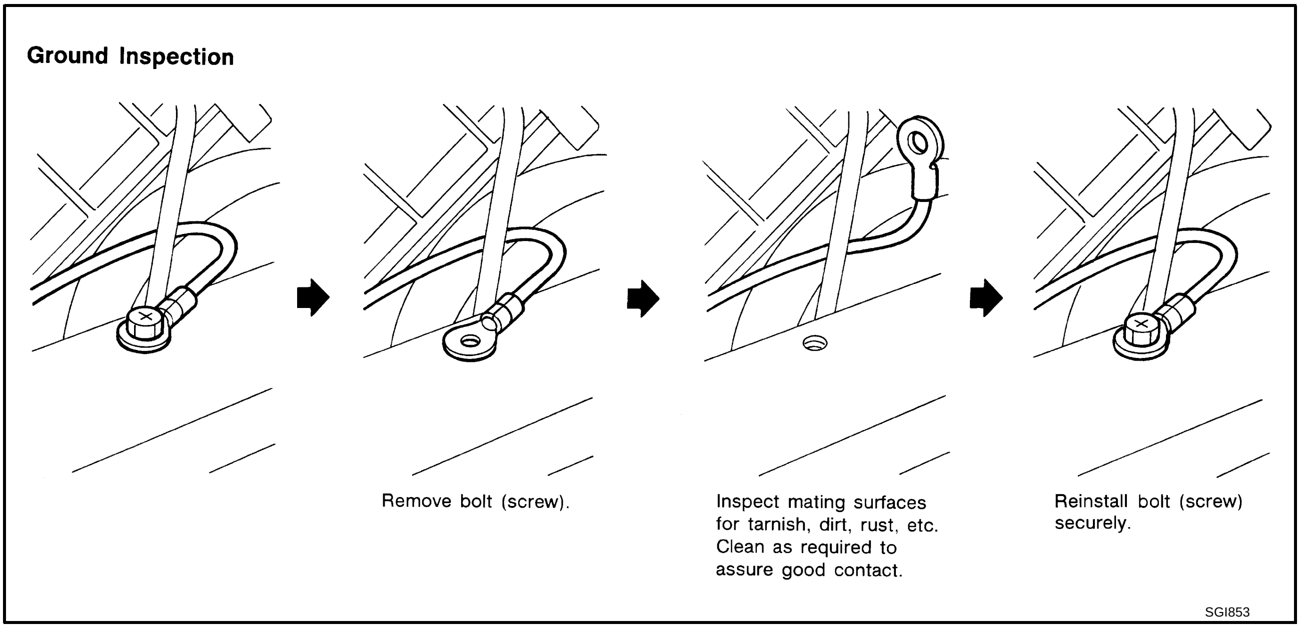

SGI853

Voltage Drop Tests

Voltage drop tests are often used to find components or circuits which have excessive resistance. A voltage drop in a circuit is caused by a resistance when the circuit is in operation.
Check the wire in the illustration. When measuring resistance with DMM, contact by a single strand of wire will give reading of 0 ohms. This would indicate a good circuit. When the circuit operates, this single strand of wire is not able to carry the current. The single strand will have a high resistance to the current. This will be picked up as a slight voltage drop.
Unwanted resistance can be caused by many situations as follows:

- Undersized wiring (single strand example)
- Corrosion on switch contacts
- Loose wire connections or splices.

If repairs are needed always use wire that is of the same or larger gauge.

MEASURING VOLTAGE DROP — ACCUMULATED METHOD

- Connect the DMM across the connector or part of the circuit you want to check. The positive lead of the DMM should be closer to power and the negative lead closer to ground.
- Operate the circuit.
- The DMM will indicate how many volts are being used to “push” current through that part of the circuit.

Note in the illustration that there is an excessive 4.1 volt drop between the battery and the bulb.

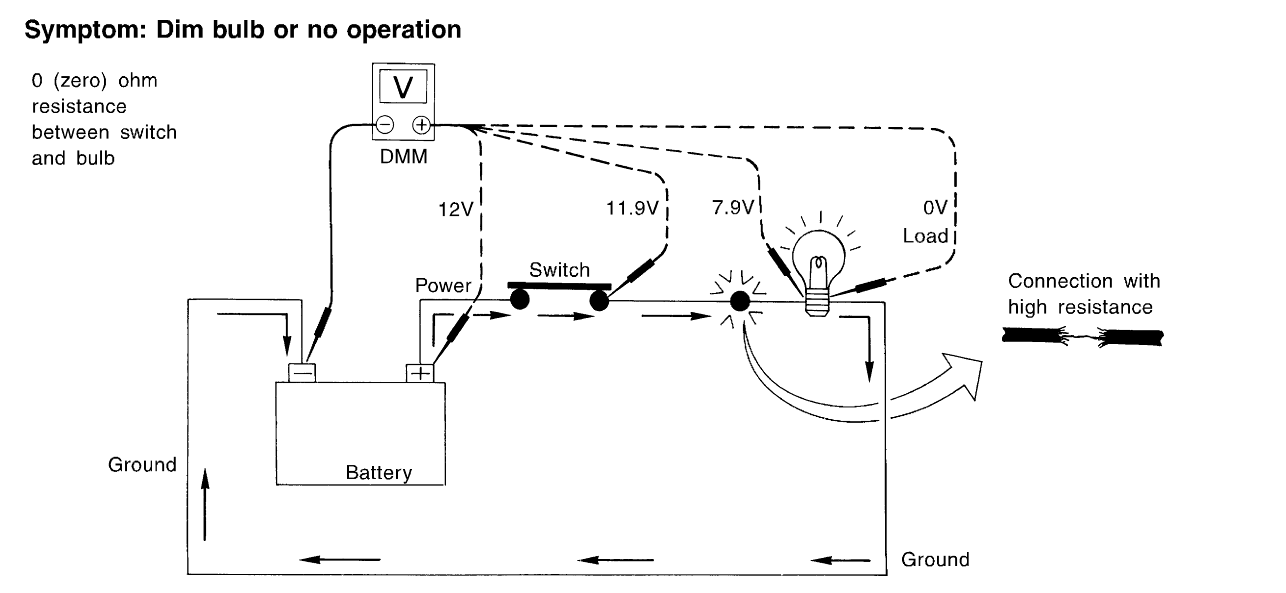

SGI974

MEASURING VOLTAGE DROP — STEP-BY-STEP

The step-by-step method is most useful for isolating excessive drops in low voltage systems (such as those in “Computer Controlled Systems”).
Circuits in the “Computer Controlled System” operate on very low amperage.
The (Computer Controlled) system operations can be adversely affected by any variation in resistance in the system. Such resistance variation may be caused by poor connection, improper installation, improper wire gauge or corrosion.
The step by step voltage drop test can identify a component or wire with too much resistance.

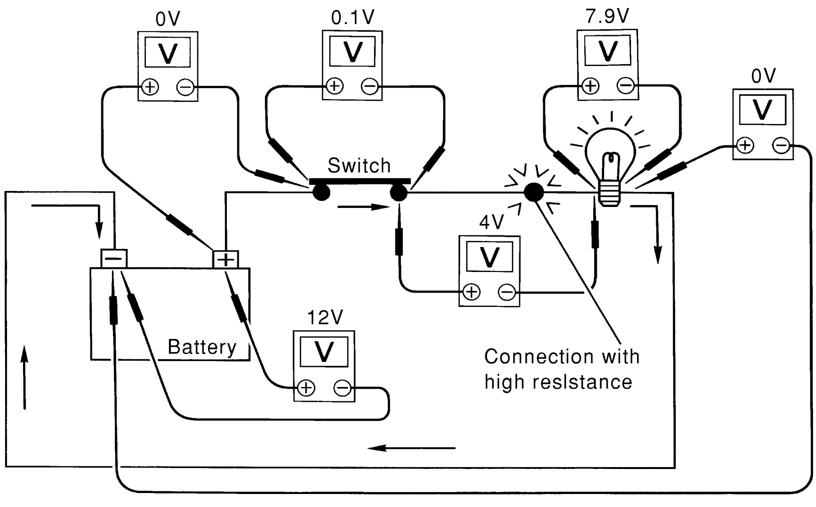

1. Connect the DMM as shown, starting at the battery and working your way around the circuit.
2. An unusually large voltage drop will indicate a component or wire that needs to be repaired, As you can see the illustration above, the poor connection causes a 4 volt drop.

The chart that follows illustrates some maximum allowable voltage drops. These values are given as a guideline, the exact value for each component may vary.

COMPONENT	VOLTAGE DROP
Wire	negligible < .001 volts
Ground Connections	Approx. 0.1 volts
Switch Contacts	Approx. 0.3 volts

SAIA0258E

Control Unit Circuit Test

System Description:When the switch is ON, the control unit lights up the lamp.

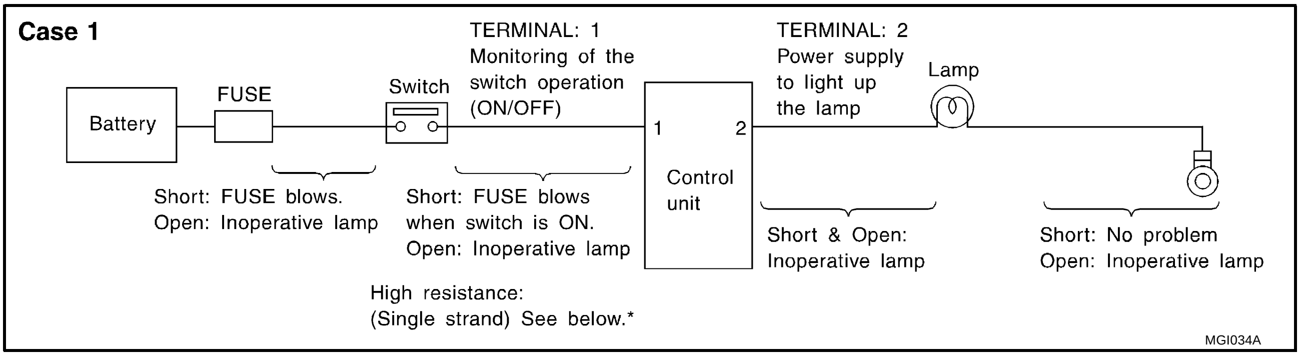

INPUT-OUTPUT VOLTAGE CHART

Pin No.	Item	Condition	Voltage value [V]	In case of high resistance such as single strand [V] *
1	Switch	Switch ON	Battery voltage	Lower than battery voltage Approx. 8 (Example)
		Switch OFF	Approx. 0	Approx. 0
2	Lamp	Switch ON	Battery voltage	Approx. 0 (Inoperative lamp)
		Switch OFF	Approx. 0	Approx. 0

The voltage value is based on the body ground.

*:If high resistance exists in the switch side circuit (caused by a single strand), terminal 1 does not detect battery voltage. Control unit does not detect the switch is ON even if the switch does not turn ON. Therefore, the control unit does not supply power to light up the lamp.

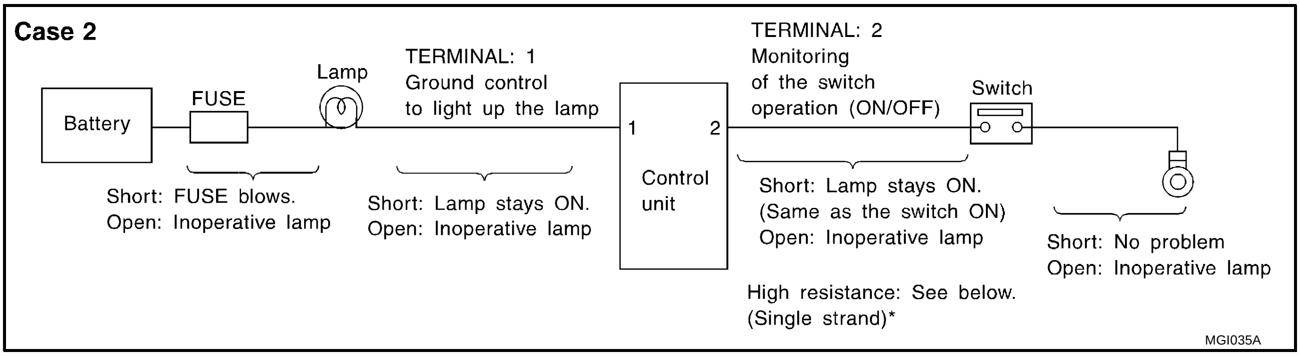

INPUT-OUTPUT VOLTAGE CHART

Pin No.	Item	Condition	Voltage value [V]	In case of high resistance such as single strand [V] *
1	Lamp	Switch ON	Approx. 0	Battery voltage (Inoperative lamp)
		Switch OFF	Battery voltage	Battery voltage
2	Switch	Switch ON	Approx. 0	Higher than 0 Approx. 4 (Example)
		Switch OFF	Approx. 5	Approx. 5

The voltage value is based on the body ground.

*:If high resistance exists in the switch side circuit (caused by a single strand), terminal 2 does not detect approx. 0V. Control unit does not detect the switch is ON even if the switch does not turn ON. Therefore, the control unit does not control ground to light up the lamp.

Control Units and Electrical Parts

AAS000NW

PRECAUTIONS

- Never reverse polarity of battery terminals.
- Install only parts specified for a vehicle.
- Before replacing the control unit, check the input and output and functions of the component parts.
- Do not apply excessive force when disconnecting a connector.
- If a connector is installed by tightening bolts, loosen bolt mounting it, then take it out by hand.

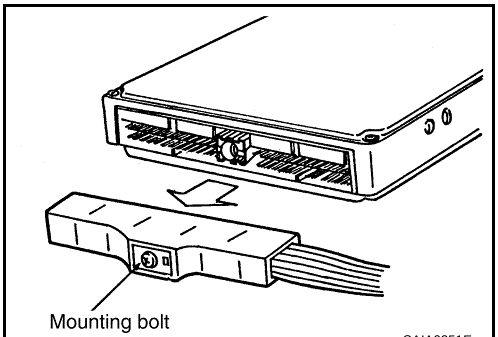

SAIA0251E

- Before installing a connector, make sure the terminal is not bent or damaged, and then correctly connect it.
  When installing a connector by tightening bolts, fix it by tightening the mounting bolt until the painted projection of the connector becomes even with the surface.

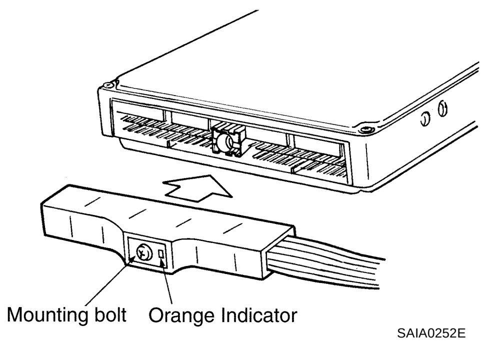

SAIA0252E

- For removal of the lever type connector, pull the lever up to the direction pointed to by the arrow A in the figure, and then remove the connector.

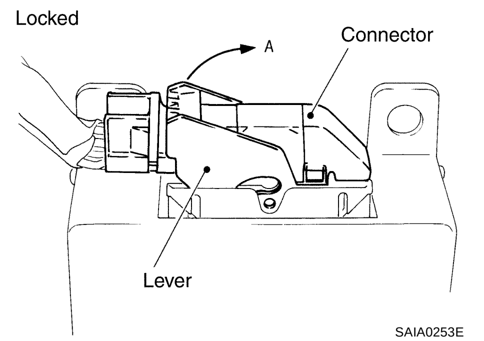

SAIA0253E

- For installation of the lever type connector, pull down the lever to the direction pointed by the arrow B in the figure, and then push the connector until a clicking noise is heard.

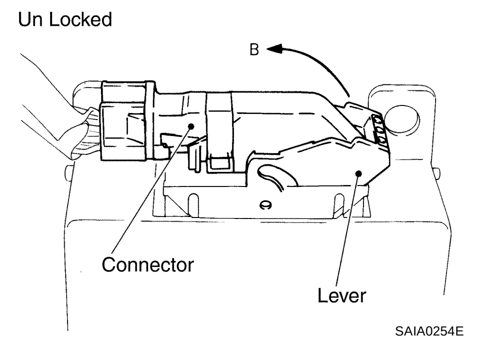

SAIA0254E

- Do not apply excessive shock to the control unit by dropping or hitting it.
- Be careful to prevent condensation in the control unit due to rapid temperature changes and do not let water or rain get on it. If water is found in the control unit, dry it fully and then install it in the vehicle.
- Be careful not to let oil to get on the control unit connector.
- Avoid cleaning the control unit with volatile oil.
- Do not disassemble the control unit, and do not remove the upper and lower covers.

- When using a DMM, be careful not to let test probes get close to each other to prevent the power transistor in the control unit from damaging battery voltage because of short circuiting.
- When checking input and output signals of the control unit, use the specified check adapter.

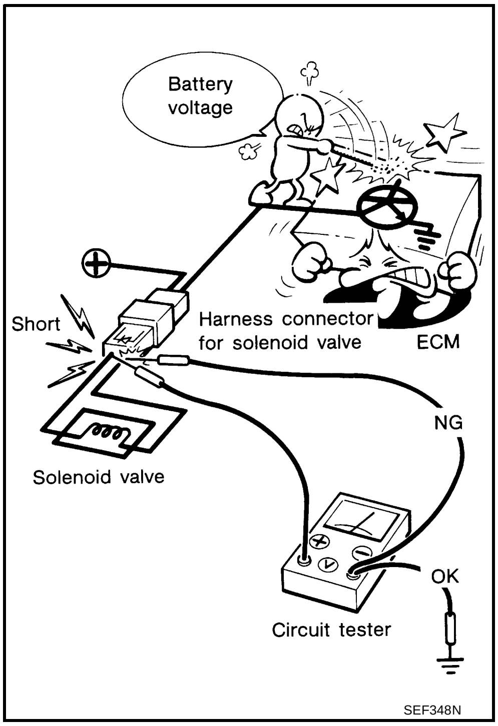

CONSULT-II CHECKING SYSTEM

PFP:00000

Description

AAS000NX

- CONSULT-II is a hand-held type tester. When it is connected with a diagnostic connector equipped on the vehicle side, it will communicate with the control unit equipped in the vehicle and then enable various kinds of diagnostic tests.
- Refer to “CONSULT-II Software Operation Manual” for more information.

Function and System Application

AAS000NY

Diagnostic test mode	Function	ENGINE	A/T	ALL MODE AWD/ 4WD	AIR BAG	ABS	ABS (Including VDC)	NVIS (NATS)
Work support	This mode enables a technician to adjust some devices faster and more accurately by following the indications on CONSULT-II.	x	x	-	-	-	x	-
Self-diagnostic results	Self-diagnostic results can be read and erased quickly.	x	x	x	x	x	x	x
Trouble diagnostic record	Current self-diagnostic results and all trouble diagnostic records previously stored can be read.	-	-	-	x	-	-	-
Data monitor	Input/Output data in the ECM can be read.	x	x	x	-	x	x	-
CAN diagnosis support monitor	The condition of CAN communication line can be indicated.	x	x	x	-	x	x	-
Active test	Diagnostic Test Mode in which CONSULT-II drives some actuators apart from the ECMs and also shifts some parameters in a specified range.	x	-	x	-	x	x	-
DTC confirmation	The results of SRT (System Readiness Test) and the self-diagnosis status/result can be confirmed.	x	-	-	-	-	-	-
DTC work support	The operating condition to confirm Diagnosis Trouble Codes can be selected.	x	x	-	-	-	-	-
ECM (ECU, TCM) part number	ECM (ECU, TCM) part number can be read.	x	x	x	-	x	x	-
ECU discriminated No.	Classification number of a replacement ECU can be read to prevent an incorrect ECU from being installed.	-	-	-	x	-	-	-
Function test	This mode can show results of self-diagnosis of ECU with either “OK” or “NG”. For engines,more practical tests regarding sensors / switches and / or actuators are available.	x	x	-	x	x	x	-
Control unit initialization	All registered ignition key IDs in NATS components can be initialized and new IDs can be registered.	-	-	-	-	-	-	x
CALIB data	Characteristic information for TCM and CVT assembly can be read. Do not use, but displayed.	-	-	-	-	-	-	-

x: Applicable

Nickel Metal Hydride Battery Replacement

AAS000NZ

CONSULT-II contains a nickel metal hydride battery. When replacing the battery obey the following:

WARNING:

Replace the nickel metal hydride battery with Genuine CONSULT-II battery only. Use of another battery may present a risk of fire or explosion. The battery may present a fire or chemical burn hazard if mistreated. Do not recharge, disassemble or dispose of in fire.

Keep the battery out of reach of children and discard used battery conforming to the local regulations.

Checking Equipment

AAS000O0

When ordering the following equipment, contact your NISSAN/INFINITI distributor.

Tool name	Description
NISSAN CONSULT-II 1. CONSULT-II unit (Tester internal soft: Resident version 3.3.0) and accessories 2. Program card UED04D-1 and AEN04A-1 (For NATS) 3. CONSULT-II CONVERTER 4. "CONSULT-II Pigtail" Cable	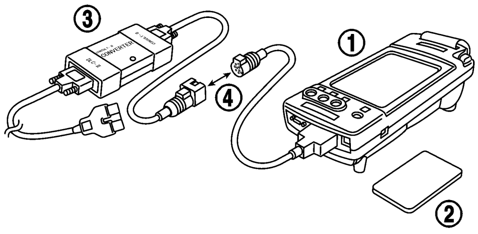 SAIA0363E

NOTE:

- The CONSULT-II must be used in conjunction with a program card.
  CONSULT-II does not require loading (Initialization) procedure.
- Be sure the CONSULT-II is turned off before installing or removing a program card.

CAUTION:

- **If CONSULT-II is used with no connection of CONSULT-II CONVERTER, malfunctions might be detected in self-diagnosis depending on control unit which carry out CAN communication.**
- **If CONSULT-II CONVERTER is not connected with CONSULT-II, vehicle occur the "FAIL SAFE MODE" which is "LIGHT UP the HEAD LIGHT" and/or "COOLING FAN ROTATING" when CONSULT-II is started.**
- **Previous CONSULT-II "I" and "Y" DLC-I and DLC-II cables should NOT be used anymore because their DDL connector pins can be damaged during cable swapping.**

CONSULT-II Start Procedure

AAS000O1

NOTE:

Turning ignition switch off when performing CAN diagnosis could cause CAN memory to be erased.

1. Connect CONSULT-II and CONSULT-II CONVERTER to the data link connector.

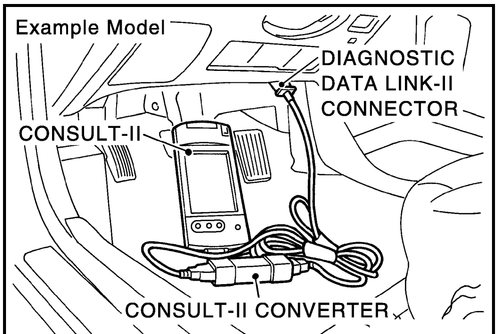

PAIA0070E

2. When the ignition switch OFF, turn ignition switch ON.
3. Touch "START (NISSAN BASED VHCL)" key.

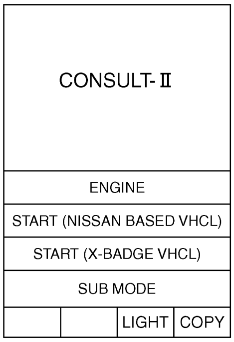

SAIA0450E

CONSULT-II Data Link Connector (DLC) Circuit

AAS000O2

INSPECTION PROCEDURE

If the CONSULT-II cannot diagnose the system properly, check the following items.

Symptom	Check item
CONSULT-II cannot access any system.	● CONSULT-II DLC power supply circuit (Terminal 8) and ground circuit (Terminal 4) (For detailed circuit, refer to EC-657, "MIL AND DATA LINK CONNECTOR" in EC section.) ● CONSULT-II DLC cable and CONSULT-II CONVERTER
CONSULT-II cannot access individual system. (Other systems can be accessed.)	● CONSULT-II program card (Check the appropriate CONSULT-II program card for the system. Refer to GI-37, "Checking Equipment" .) ● Power supply and ground circuit for the control unit of the system (For detailed circuit, refer to wiring diagram for each system.) ● Open or short circuit between the system and CONSULT-II DLC (For detailed circuit, refer to wiring diagram for each system.) ● Open or short circuit CAN communication line. Refer to LAN-3, "Precautions for Harness Repair" .

NOTE:
The DDL1 and DDL2 circuits from DLC pins 12, 13, 14 and 15 may be connected to more than one system. A short in a DDL circuit connected to a control unit in one system may affect CONSULT-II access to other systems.

CIRCUIT DIAGRAM

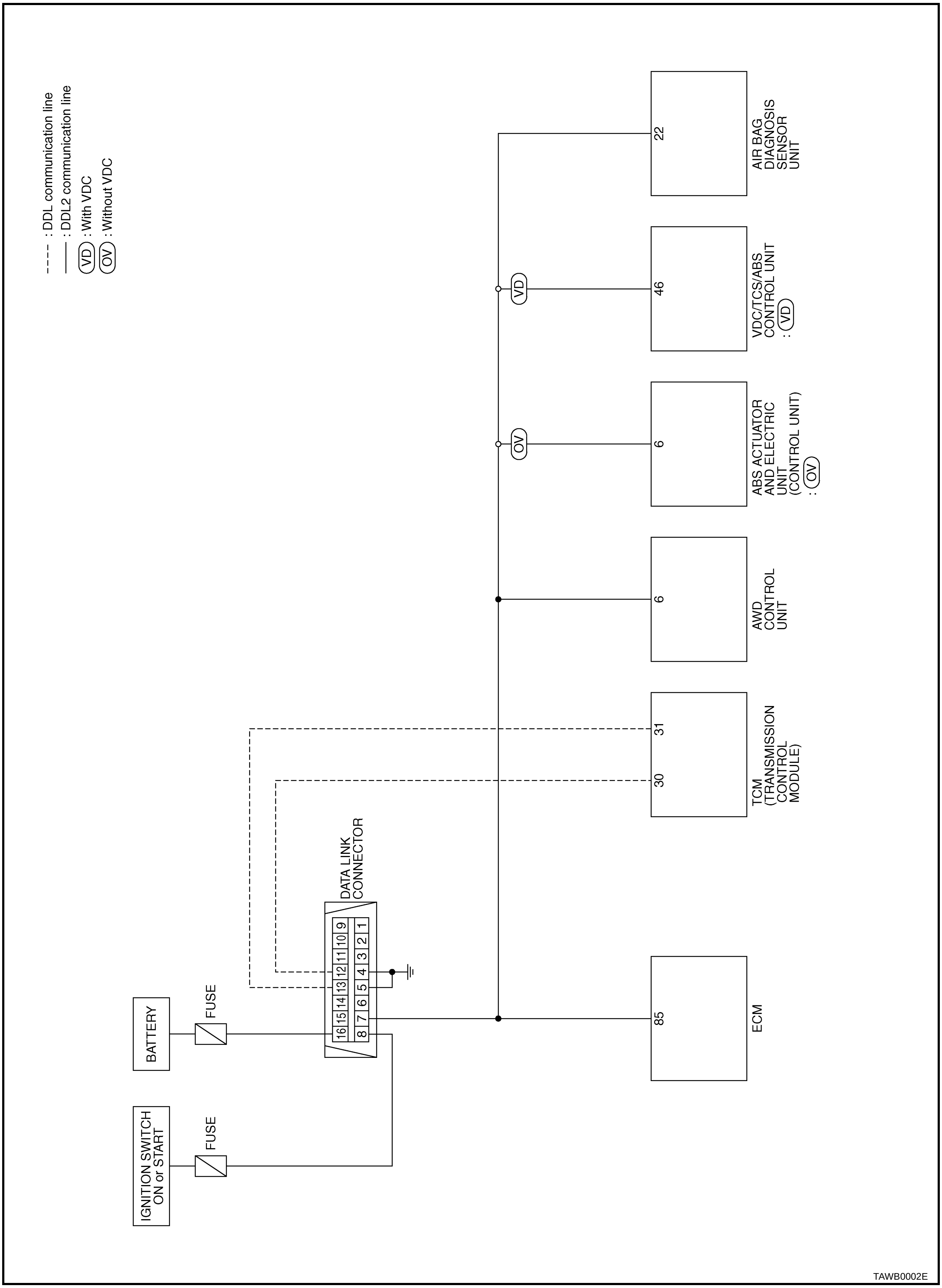

LIFTING POINT

PFP:00000

Special Service Tools

AAS000O3

The actual shapes of Kent-Moore tools may differ from those of special service tools illustrated here.

Tool number (Kent-Moore No.) Tool name	Description
LM4086-0200 (-) Board on attachment	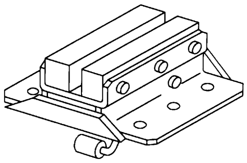 S-NT001
LM4519-0000 (-) Safety stand attachment	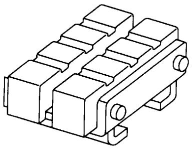 S-NT002

CAUTION:

- **Every time the vehicle is lifted up, maintain the complete vehicle curb condition.**
- **Since the vehicle's center of gravity changes when removing main parts on the front side (engine, transmission, suspension etc.), support a jack up point on the rear side garage jack with a mission jack or equivalent.**
- **Since the vehicle's center of gravity changes when removing main parts on the rear side (rear axle, suspension, etc.), support a jack up point on the front side garage jack with a mission jack or equivalent.**
- **Be careful not to smash or do not do anything that would affect piping parts.**

Garage Jack and Safety Stand

AAS000O4

WARNING:

- **Park the vehicle on a level surface when using the jack. Make sure to avoid damaging pipes, tubes, etc. under the vehicle.**
- **Never get under the vehicle while it is supported only by the jack. Always use safety stands when you have to get under the vehicle.**

- **Place wheel chocks at both front and back of the wheels on the ground.**

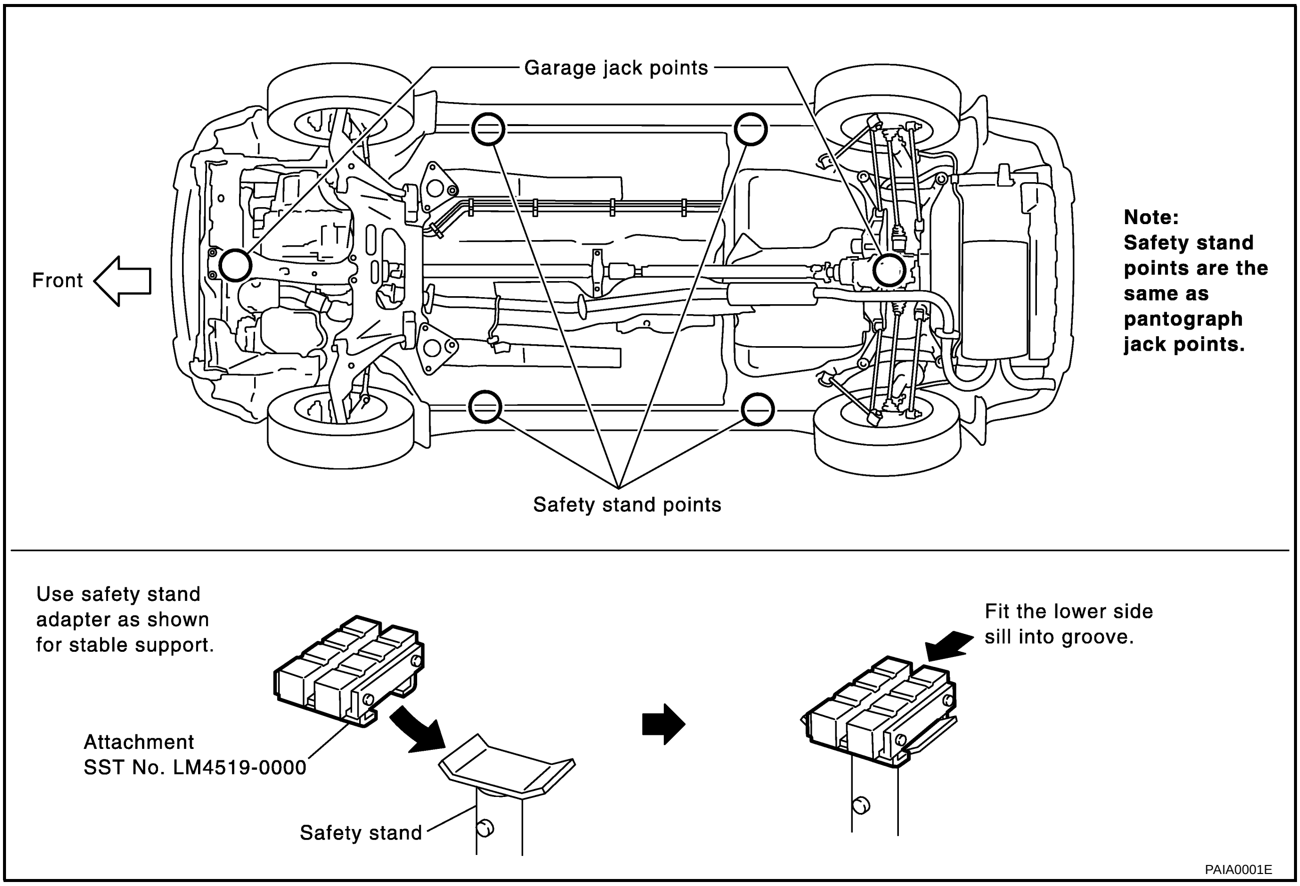

CAUTION:

There is canister just behind Garage jack point rear. Jack up be carefully.

2-Pole Lift

AAS000O5

WARNING:

When lifting the vehicle, open the lift arms as wide as possible and ensure that the front and rear of the vehicle are well balanced.

When setting the lift arm, do not allow the arm to contact the brake tubes, brake cable, fuel lines and sill spoiler.

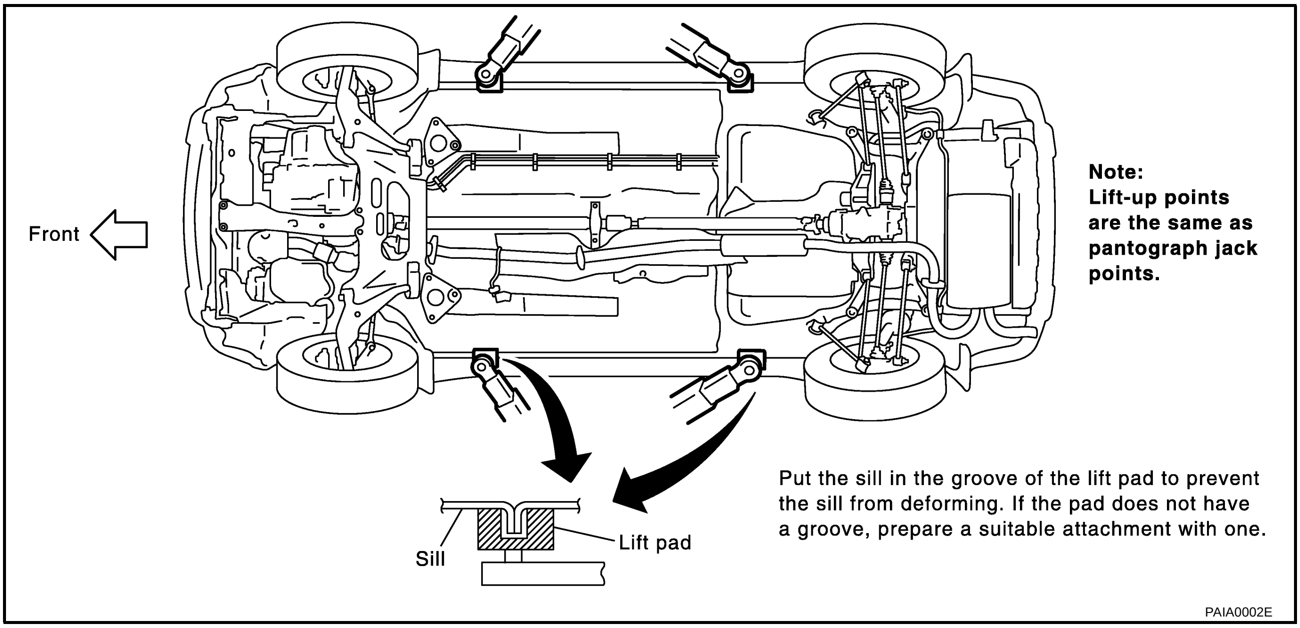

Board- On Lift

AAS000O6

CAUTION:

Make sure vehicle is empty when lifting.

- **The board-on lift attachment (LM4086-0200) set at front end of vehicle should be set on the front of the sill under the front door opening.**
- **Position attachments at front and rear ends of board-on lift.**

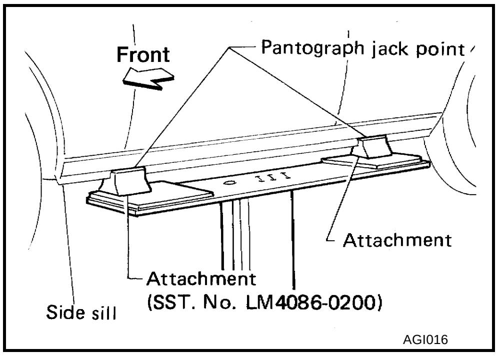

TOW TRUCK TOWING

PFP:00000

Tow Truck Towing

AAS000O7

CAUTION:

- **All applicable state or Provincial (in Canada) laws and local laws regarding the towing operation must be obeyed.**
- **It is necessary to use proper towing equipment to avoid possible damage to the vehicle during towing operation. Towing is in accordance with Towing Procedure Manual at dealer.**
- **Always attach safety chains before towing.**
- **When towing, make sure that the transmission, steering system and power train are in good order. If any unit is damaged, dollies must be used.**
- **Never tow an automatic transmission model from the rear (that is backward) with four wheels on the ground. This may cause serious and expensive damage to the transmission.**

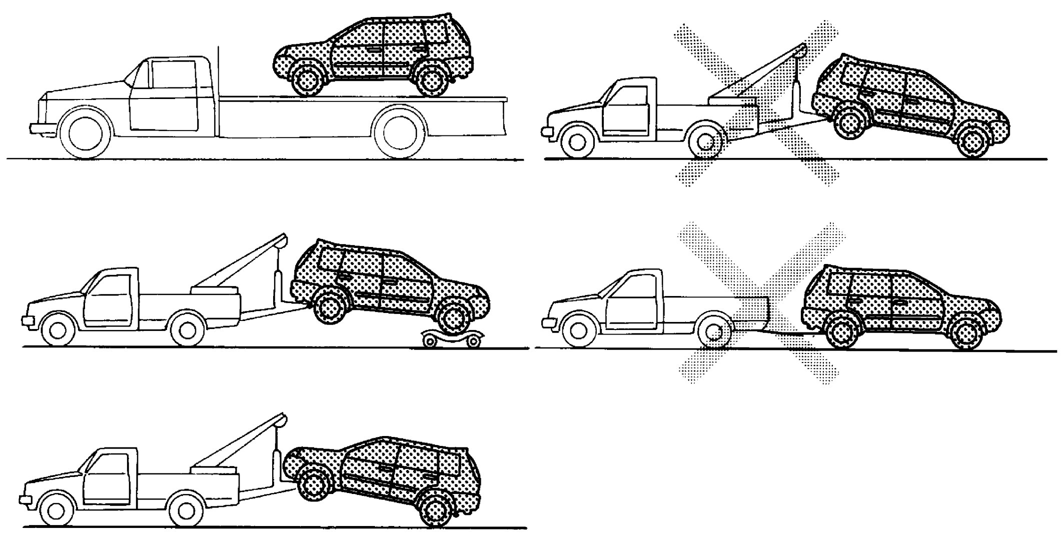

PAIA0276E

2WD MODELS

NISSAN recommends that vehicle be towed with the driving (front) wheels off the ground or that a dolly be used as illustrated.

CAUTION:

- **Never tow automatic transmission models with the front wheels on the ground or four wheels on the ground (forward or backward) as this may cause serious and expensive damage to the transmission.**
  If it is necessary to tow the vehicle with the rear wheels raised, always use towing dollies under the front wheels.
- **When towing automatic transmission models with the front wheels on towing dollies:**
- **Turn the ignition key to the OFF position, and secure the steering wheel in a straight ahead position with a rope or similar device.**
  Never secure the steering wheel by turning the ignition key to the LOCK position. This may damage the steering lock mechanism.
- **Move the selector lever to the N (Neutral) position.**

- **When towing two wheel drive automatic transmission model with the rear wheels on the ground (if you do not use towing dollies): Always release the parking brake.**

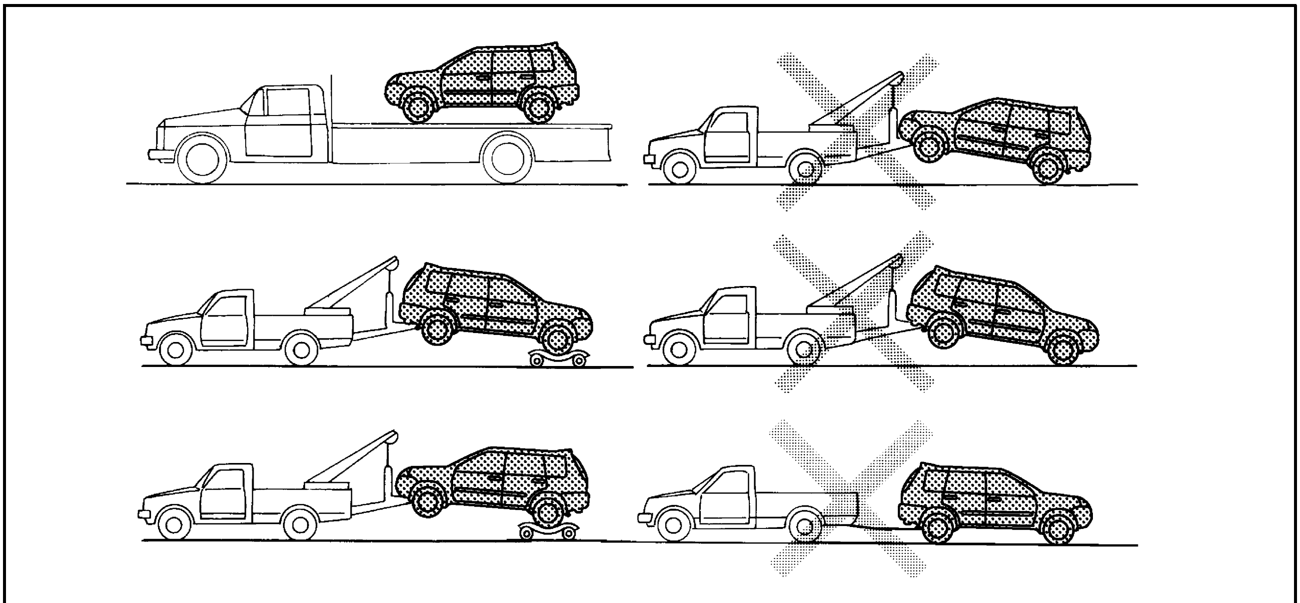

PAIA0275E

AWD MODELS

NISSAN recommends that a dolly be used as illustrated when towing AWD models.

CAUTION:

Never tow automatic transmission AWD models with any of the wheels on the ground as this may cause serious and expensive damage to the drive train.

Vehicle Recovery (Freeing a Stuck Vehicle)

AAS000O8

- Use the recovery hooks only, not other parts of the vehicle. Otherwise, the vehicle body will be damaged.
- Use the recovery hook only to free a vehicle stuck in sand, snow, mud, etc. Never tow the vehicle for a long distance using only the recovery hook.
- The recovery hook is under tremendous force when used to free a stuck vehicle. Always pull the cable straight out from the front or rear of the vehicle. Never pull on the hook at an angle.
- Stand clear of a stuck vehicle.

WARNING:

- **Do not spin the tires at high speed. This could cause them to explode and result in serious injury. Parts of the vehicle could also overheat and be damaged.**

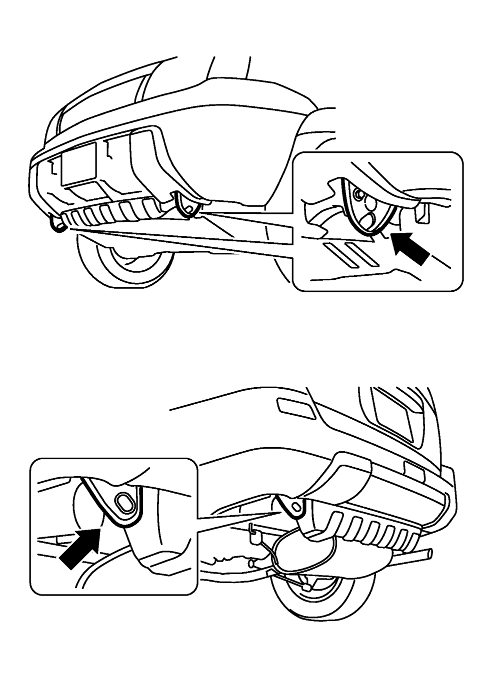

PAIA0014E

TIGHTENING TORQUE OF STANDARD BOLTS

PFP:00000

Description

AAS000ON

This vehicle has both new standard based on ISO* and previous standard bolts/nuts. There are some differences between these two types of bolts/nuts; shape of the head, grade of strength, hexagonal width across flats and the standard tightening torque.

- For guidance in discriminating, refer to GI-45, "Tightening Torque Table (New Standard Included)" .
- The new standard machine screws and tapping screws have a head of ISO standard torx recess.
- If the tightening torque is not described in the description or figure, refer to GI-45, "Tightening Torque Table (New Standard Included)" .

*ISO: International Organization for Standardization

Tightening Torque Table (New Standard Included)

AAS000OP

CAUTION:

- **The special parts are excluded.**
- **The bolts/nuts in these tables have a strength (discrimination) number/symbol assigned to the head or the like. As to the relation between the strength grade in these tables and the strength (discrimination) number/symbol, refer to “DISCRIMINATION OF BOLTS AND NUTS”.**

PREVIOUS STANDARD

Grade (Strength grade)	Bolt size	Bolt diameter mm	Hexagonal width across flats mm	Pitch mm	Tightening torque (Without lubricant)							
					Hexagon head bolt				Hexagon flange bolt			
					N·m	kg-m	ft-lb	in-lb	N·m	kg-m	ft-lb	in-lb
4T	M6	6.0	10	1.0	5.5	0.56	4	49	7	0.71	5	62
	M8	8.0	12	1.25	13.5	1.4	10	—	17	1.7	13	—
				1.0	13.5	1.4	10	—	17	1.7	13	—
	M10	10.0	14	1.5	28	2.9	21	—	35	3.6	26	—
				1.25	28	2.9	21	—	35	3.6	26	—
	M12	12.0	17	1.75	45	4.6	33	—	55	5.6	41	—
				1.25	45	4.6	33	—	65	6.6	48	—
	M14	14.0	19	1.5	80	8.2	59	—	100	10	74	—
7T	M6	6.0	10	1.0	9	0.92	7	80	11	1.1	8	97
	M8	8.0	12	1.25	22	2.2	16	—	28	2.9	21	—
				1.0	22	2.2	16	—	28	2.9	21	—
	M10	10.0	14	1.5	45	4.6	33	—	55	5.6	41	—
				1.25	45	4.6	33	—	55	5.6	41	—
	M12	12.0	17	1.75	80	8.2	59	—	100	10	74	—
				1.25	80	8.2	59	—	100	10	74	—
	M14	14.0	19	1.5	130	13	96	—	170	17	125	—
9T	M6	6.0	10	1.0	11	1.1	8	—	13.5	1.4	10	—
	M8	8.0	12	1.25	28	2.9	21	—	35	3.6	26	—
				1.0	28	2.9	21	—	35	3.6	26	—
	M10	10.0	14	1.5	55	5.6	41	—	80	8.2	59	—
				1.25	55	5.6	41	—	80	8.2	59	—
	M12	12.0	17	1.75	100	10	74	—	130	13	96	—
				1.25	100	10	74	—	130	13	96	—
	M14	14.0	19	1.5	170	17	125	—	210	21	155	—

CAUTION:

The parts with aluminum or the cast iron washer surface/screw surface are excluded.

TIGHTENING TORQUE OF STANDARD BOLTS

NEW STANDARD BASED ON ISO

Grade (Strength grade)	Bolt size	Bolt diameter mm	Hexagonal width across flats mm	Pitch mm	Tightening torque							
					Hexagon head bolt				Hexagon flange bolt			
					N·m	kg-m	ft-lb	in-lb	N·m	kg-m	ft-lb	in-lb
4.8 (Without lubricant)	M6	6.0	10	1.0	5.5	0.56	4	49	7	0.71	5	62
	M8	8.0	13	1.25	13.5	1.4	10	—	17	1.7	13	—
				1.0	13.5	1.4	10	—	17	1.7	13	—
	M10	10.0	16	1.5	28	2.9	21	—	35	3.6	26	—
				1.25	28	2.9	21	—	35	3.6	26	—
	M12	12.0	18	1.75	45	4.6	33	—	55	5.6	41	—
				1.25	45	4.6	33	—	65	6.6	48	—
	M14	14.0	21	1.5	80	8.2	59	—	100	10	74	—
4.8 (With lubricant)	M6	6.0	10	1.0	4	0.41	3	35	5.5	0.56	4	49
	M8	8.0	13	1.25	11	1.1	8	—	13.5	1.4	10	—
				1.0	11	1.1	8	—	13.5	1.4	10	—
	M10	10.0	16	1.5	22	2.2	16	—	28	2.9	21	—
				1.25	22	2.2	16	—	28	2.9	21	—
	M12	12.0	18	1.75	35	3.6	26	—	45	4.6	33	—
				1.25	35	3.6	26	—	45	4.6	33	—
	M14	14.0	21	1.5	65	6.6	48	—	80	8.2	59	—
8.8 (With lubricant)	M6	6.0	10	1.0	8	0.82	6	71	10	1.0	7	89
	M8	8.0	13	1.25	21	2.1	15	—	25	2.6	18	—
				1.0	21	2.1	15	—	25	2.6	18	—
	M10	10.0	16	1.5	40	4.1	30	—	50	5.1	37	—
				1.25	40	4.1	30	—	50	5.1	37	—
	M12	12.0	18	1.75	70	7.1	52	—	85	8.7	63	—
				1.25	70	7.1	52	—	85	8.7	63	—
	M14	14.0	21	1.5	120	12	89	—	140	14	103	—
10.9 (With lubricant)	M6	6.0	10	1.0	10	1.0	7	89	12	1.2	9	106
	M8	8.0	13	1.25	27	2.8	20	—	32	3.3	24	—
				1.0	27	2.8	20	—	32	3.3	24	—
	M10	10.0	16	1.5	55	5.6	41	—	62	6.3	46	—
				1.25	55	5.6	41	—	62	6.3	46	—
	M12	12.0	18	1.75	95	9.7	70	—	105	11	77	—
				1.25	95	9.7	70	—	105	11	77	—
	M14	14.0	21	1.5	160	16	118	—	180	18	133	—

CAUTION:

1. **Use tightening torque with lubricant for the new standard bolts/nuts in principle. Friction coefficient stabilizer is applied to the new standard bolts/nuts.**
2. **However, use tightening torque without lubricant for the following cases. Friction coefficient stabilizer is not applied to the following bolts/nuts.**

- **Grade 4.8, M6 size bolt, Conical spring washer installed**
- **Paint removing nut (Size M6 and M8) for fixing with weld bolt**

DISCRIMINATION OF BOLTS AND NUTS

BOLTS

	Grade (Strength)	Discrimination	
Previous standard	4T ($392N/mm^2$)	4	(No number/ symbol)
	7T ($686N/mm^2$)	7	
	9T ($883N/mm^2$)	9	
New Standard	4.8 ($420N/mm^2$)	4.8	(No number/ symbol)
	8.8 ($800N/mm^2$)	8.8	
	10.9 ($1040N/mm^2$)	10.9	

NUTS

	Grade (Proof load stress)	Discrimination		
Previous standard	7N ($686N/mm^2$)	(No number/ symbol)		
	9N ($883N/mm^2$)	·9		
New Standard	8 ($800N/mm^2$)	8		(No number/ symbol)
	10 ($1040N/mm^2$)	10		

NOTICE:

- A number is assigned on the side of the nuts in some cases.
- A number or symbol is assigned on the upper surface of the flange for the nut with flange.

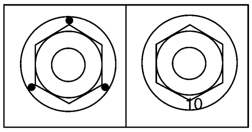

MACHINE SCREWS AND TAPPING SCREWS

Shape of the head :

Cross recess for the previous standard

Torx recess for the new standard

Screw size	Screw diameter	Torx size
M4	4.0	T20
M5	5.0	T20
M6	6.0	T30

NOTICE:

Use torx size T20 (united with M4 screw) for M5 screw although ISO standard specifies T25.

SAIA0453E

RECOMMENDED CHEMICAL PRODUCTS AND SEALANTS

PFP:00000

Recommended Chemical Products and Sealants

AAS000OA

Refer to the following chart for help in selecting the appropriate chemical product or sealant.

	Product Description	Purpose	Nissan North America Part No. (USA)	Nissan Canada Part No. (Canada)	Aftermarket Cross-reference Part Nos.
1	Rear View Mirror Adhesive	Used to permanently remount rear view mirrors to windows.	999MP-AM000P	99998-50505	Permatex 81844
2	Anaerobic Liquid Gasket	For metal-to-metal flange sealing. Can fill a 0.38 mm (0.015 inch) gap and provide instant sealing for most powertrain applications.	999MP-AM001P	99998-50503	Permatex 51813 and 51817
3	High Performance Thread Sealant	Provides instant sealing on any threaded straight or parallel threaded fitting. (Thread sealant only, no locking ability.) ● Do not use on plastic.	999MP-AM002P	999MP-AM002P	Permatex 56521
4	Silicone RTV	Gasket Maker	999MP-AM003P (Ultra Grey)	99998-50506 (Ultra Grey)	Permatex Ultra Grey 82194; Three Bond 1207,1215, 1216, 1217F, 1217G and 1217H Nissan RTV Part No. 999MP-A7007
		Gasket Maker for Maxima/ Quest 5-speed automatic transmission (RE5F22A)	–	–	Three Bond 1281B or exact equivalent in its quality
5	High Temperature, High Strength Thread Locking Sealant (Red)	Threadlocker	999MP-AM004P	999MP-AM004P	Permatex 27200; Three Bond 1360, 1360N, 1305 N&P, 1307N, 1335, 1335B, 1363B, 1377C, 1386B, D&E and 1388 Loctite 648
6	Medium Strength Thread Locking Sealant (Blue)	Threadlocker (service tool removable)	999MP-AM005P	999MP-AM005P	Permatex 24200, 24206, 24240, 24283 and 09178; Three Bond 1322, 1322N, 1324 D&N, 1333D, 1361C, 1364D, 1370C and 1374

IDENTIFICATION INFORMATION

PFP:00010

Model Variation

AAS000OB

Body	Engine	Axle	Transaxle	Model	Destination
Wagon	QR25DE	2WD*1	RE4F04B (4AT)	TDBALAA-ENA	CANADA
				TDBALFA-ENA	
		AWD*2	RE4F04B (4AT)	TDBNLAA-ENA	
				TDBNLFA-ENA	
			RS5F51A (5MT)	TDBNLAF-ENA	
				TDBNLFF-ENA	

*1: 2WD model stands for FWD model.
*2: AWD model stands for all wheel drive model.

Prefix and suffix designations:

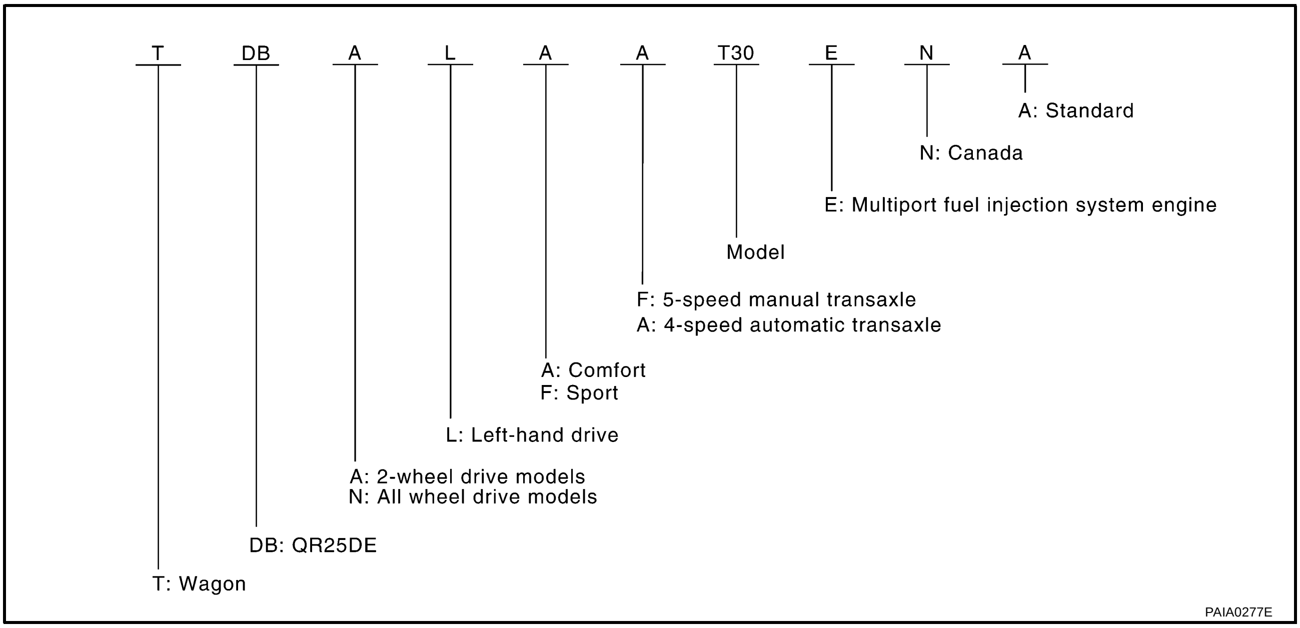

IDENTIFICATION NUMBER

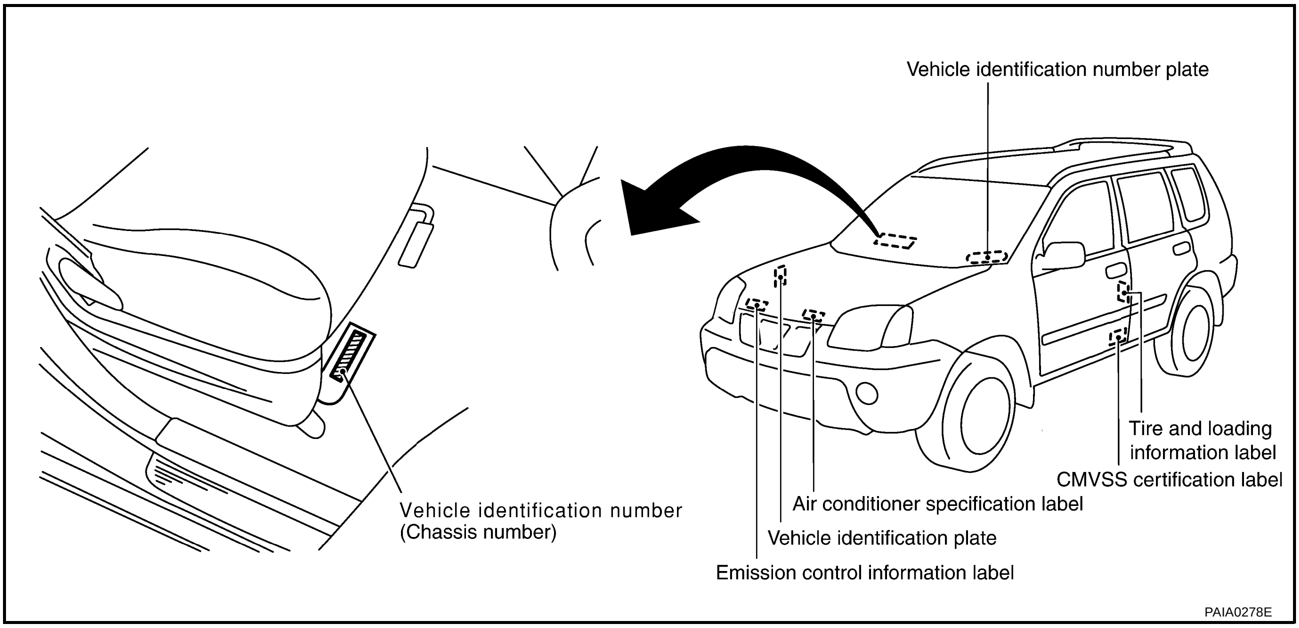

VEHICLE Identification Number ARRANGEMENT

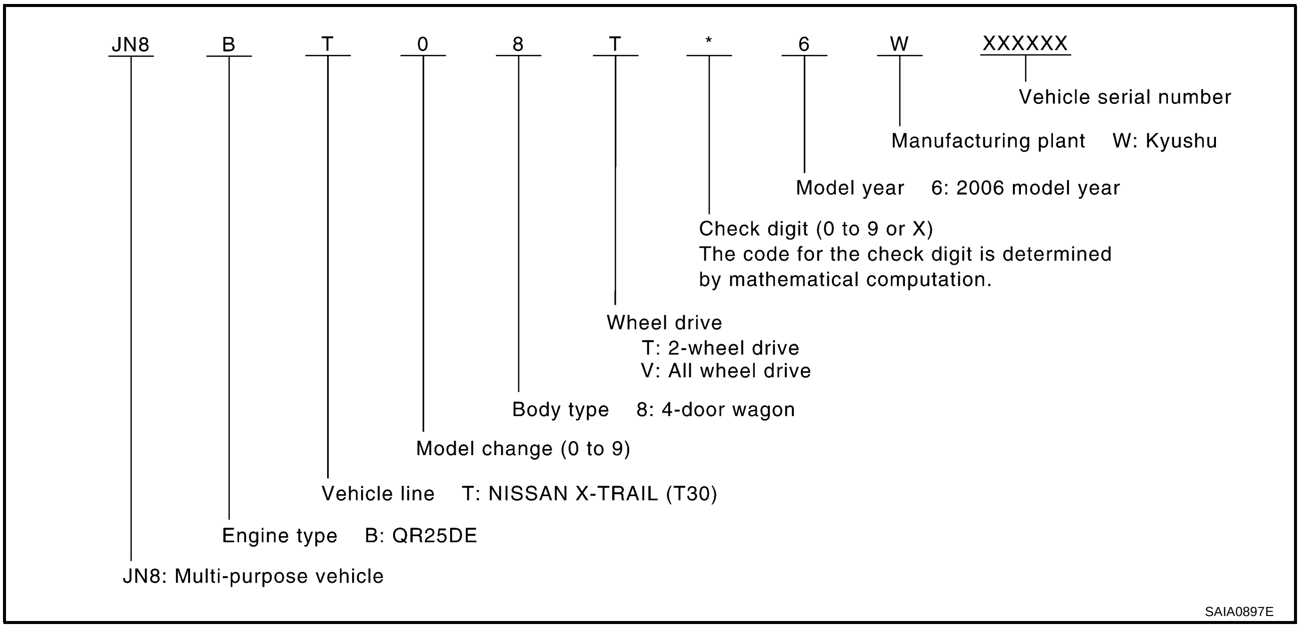

IDENTIFICATION PLATE

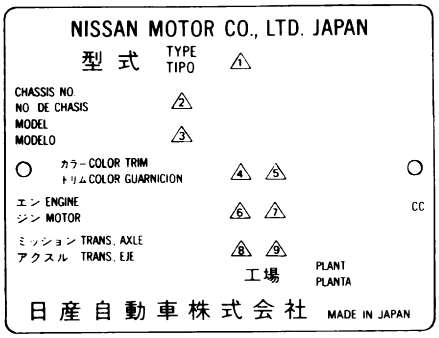

1 Type
2 Vehicle identification number (Chassis number)
3 Model
4 Body color code
5 Trim color code
6 Engine model
7 Engine displacement
8 Transmission model
9 Axle model

SGI315

ENGINE SERIAL NUMBER

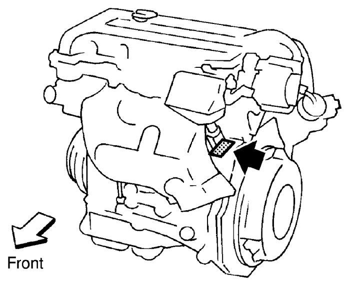

PAIA0280E

AUTOMATIC TRANSAXLE NUMBER

F04B model

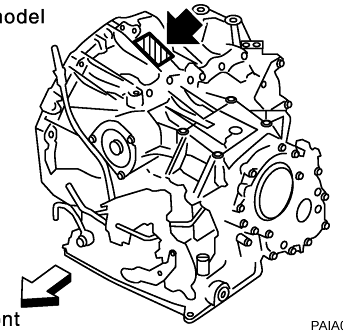

PAIA0009E

MANUAL TRANSAXLE NUMBER

F51A model

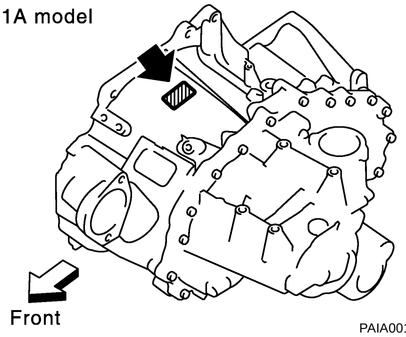

PAIA0010E

Dimensions

AAS000OC

Unit: mm (in)

Overall length		4,455 (175.4)
Overall width		1,765 (69.5)
Overall height	with roof rack rail	1,675 (65.9)
	with rear spoiler	1,750 (68.9)
Front tread		1,530 (60.2)
Rear tread		1,530 (60.2)
Wheelbase		2,625 (103.3)

Wheels & Tires

AAS000OD

	Conventional	Spare
Road wheel/offset mm (in)	16 X 6.5JJ Steel/40 (1.57) 16 X 6.5JJ Aluminum/40 (1.57) 17 X 6.5JJ Aluminum/40 (1.57)	Conventional
Tire size	P215/65 R16 P215/60 R17	Conventional

TERMINOLOGY

PFP:00011

SAE J1930 Terminology List

AAS000OE

All emission related terms used in this publication in accordance with SAE J1930 are listed. Accordingly, new terms, new acronyms/abbreviations and old terms are listed in the following chart.

NEW TERM	NEW ACRONYM / ABBREVIATION	OLD TERM
Air cleaner	ACL	Air cleaner
Barometric pressure	BARO	***
Barometric pressure sensor-BCDD	BAROS-BCDD	BCDD
Camshaft position	CMP	***
Camshaft position sensor	CMPS	Crank angle sensor
Canister	***	Canister
Carburetor	CARB	Carburetor
Charge air cooler	CAC	Intercooler
Closed loop	CL	Closed loop
Closed throttle position switch	CTP switch	Idle switch
Clutch pedal position switch	CPP switch	Clutch switch
Continuous fuel injection system	CFI system	***
Continuous trap oxidizer system	CTOX system	***
Crankshaft position	CKP	***
Crankshaft position sensor	CKPS	***
Data link connector	DLC	***
Data link connector for CONSULT-II	DLC for CONSULT-II	Diagnostic connector for CONSULT-II
Diagnostic test mode	DTM	Diagnostic mode
Diagnostic test mode selector	DTM selector	Diagnostic mode selector
Diagnostic test mode I	DTM I	Mode I
Diagnostic test mode II	DTM II	Mode II
Diagnostic trouble code	DTC	Malfunction code
Direct fuel injection system	DFI system	***
Distributor ignition system	DI system	Ignition timing control
Early fuel evaporation-mixture heater	EFE-mixture heater	Mixture heater
Early fuel evaporation system	EFE system	Mixture heater control
Electrically erasable programmable read only memory	EEPROM	***
Electronic ignition system	EI system	Ignition timing control
Engine control	EC	***
Engine control module	ECM	ECCS control unit
Engine coolant temperature	ECT	Engine temperature
Engine coolant temperature sensor	ECTS	Engine temperature sensor
Engine modification	EM	***
Engine speed	RPM	Engine speed
Erasable programmable read only memory	EPROM	***
Evaporative emission canister	EVAP canister	Canister
Evaporative emission system	EVAP system	Canister control solenoid valve
Exhaust gas recirculation valve	EGR valve	EGR valve

NEW TERM	NEW ACRONYM / ABBREVIATION	OLD TERM
Exhaust gas recirculation control-BPT valve	EGRC-BPT valve	BPT valve
Exhaust gas recirculation control-solenoid valve	EGRC-solenoid valve	EGR control solenoid valve
Exhaust gas recirculation temperature sensor	EGRT sensor	Exhaust gas temperature sensor
EGR temperature sensor		
Flash electrically erasable programmable read only memory	FEEPROM	***
Flash erasable programmable read only memory	FEPROM	***
Flexible fuel sensor	FFS	***
Flexible fuel system	FF system	***
Fuel pressure regulator	***	Pressure regulator
Fuel pressure regulator control solenoid valve	***	PRVR control solenoid valve
Fuel trim	FT	***
Heated Oxygen sensor	HO2S	Exhaust gas sensor
Idle air control system	IAC system	Idle speed control
Idle air control valve-air regulator	IACV-air regulator	Air regulator
Idle air control valve-auxiliary air control valve	IACV-AAC valve	Auxiliary air control (AAC) valve
Idle air control valve-FICD solenoid valve	IACV-FICD solenoid valve	FICD solenoid valve
Idle air control valve-idle up control solenoid valve	IACV-idle up control solenoid valve	Idle up control solenoid valve
Idle speed control-FI pot	ISC-FI pot	FI pot
Idle speed control system	ISC system	***
Ignition control	IC	***
Ignition control module	ICM	***
Indirect fuel injection system	IFI system	***
Intake air	IA	Air
Intake air temperature sensor	IAT sensor	Air temperature sensor
Knock	***	Detonation
Knock sensor	KS	Detonation sensor
Malfunction indicator lamp	MIL	Check engine light
Manifold absolute pressure	MAP	***
Manifold absolute pressure sensor	MAPS	***
Manifold differential pressure	MDP	***
Manifold differential pressure sensor	MDPS	***
Manifold surface temperature	MST	***
Manifold surface temperature sensor	MSTS	***
Manifold vacuum zone	MVZ	***
Manifold vacuum zone sensor	MVZS	***
Mass air flow sensor	MAFS	Air flow meter
Mixture control solenoid valve	MC solenoid valve	Air-fuel ratio control solenoid valve
Multiport fuel injection System	MFI system	Fuel injection control

TERMINOLOGY

NEW TERM	NEW ACRONYM / ABBREVIATION	OLD TERM
Nonvolatile random access memory	NVRAM	***
On board diagnostic system	OBD system	Self-diagnosis
Open loop	OL	Open loop
Oxidation catalyst	OC	Catalyst
Oxidation catalytic converter system	OC system	***
Oxygen sensor	O2S	Exhaust gas sensor
Park position switch	***	Park switch
Park/neutral position switch	PNP switch	Park/neutral switch Inhibitor switch Neutral position switch
Periodic trap oxidizer system	PTOX system	***
Positive crankcase ventilation	PCV	Positive crankcase ventilation
Positive crankcase ventilation valve	PCV valve	PCV valve
Powertrain control module	PCM	***
Programmable read only memory	PROM	***
Pulsed secondary air injection control solenoid valve	PAIRC solenoid valve	AIV control solenoid valve
Pulsed secondary air injection system	PAIR system	Air induction valve (AIV) control
Pulsed secondary air injection valve	PAIR valve	Air induction valve
Random access memory	RAM	***
Read only memory	ROM	***
Scan tool	ST	***
Secondary air injection pump	AIR pump	***
Secondary air injection system	AIR system	***
Sequential multiport fuel injection system	SFI system	Sequential fuel injection
Service reminder indicator	SRI	***
Simultaneous multiport fuel injection system	***	Simultaneous fuel injection
Smoke puff limiter system	SPL system	***
Supercharger	SC	***
Supercharger bypass	SCB	***
System readiness test	SRT	***
Thermal vacuum valve	TVV	Thermal vacuum valve
Three way catalyst	TWC	Catalyst
Three way catalytic converter system	TWC system	***
Three way + oxidation catalyst	TWC + OC	Catalyst
Three way + oxidation catalytic converter system	TWC + OC system	***
Throttle body	TB	Throttle chamber SPI body
Throttle body fuel injection system	TBI system	Fuel injection control
Throttle position	TP	Throttle position
Throttle position sensor	TPS	Throttle sensor
Throttle position switch	TP switch	Throttle switch
Torque converter clutch solenoid valve	TCC solenoid valve	Lock-up cancel solenoid Lock-up solenoid

NEW TERM	NEW ACRONYM / ABBREVIATION	OLD TERM
Transmission control module	TCM	A/T control unit
Turbocharger	TC	Turbocharger
Vehicle speed sensor	VSS	Vehicle speed sensor
Volume air flow sensor	VAFS	Air flow meter
Warm up oxidation catalyst	WU-OC	Catalyst
Warm up oxidation catalytic converter system	WU-OC system	***
Warm up three way catalyst	WU-TWC	Catalyst
Warm up three way catalytic converter system	WU-TWC system	***
Wide open throttle position switch	WOTP switch	Full switch

***: Not applicable